SILICON CHIP

APRIL 2014
ISSN 1030-2662
04
9 771030 266001
PP255003/01272
$9.95* INC GST NZ$12.90 INC GST

FEATURE:

AUTONOMOUS (DRIVERLESS) VEHICLES - UNIVERSITY STUDENTS IN COMPETITION

TO BUILD:

GRUNTY POWER SUPPLY

Compact, highly efficient digital/analog supply with full metering

FREE with this issue

So You Think You Can Solder?

We go back to soldering school!

TO BUILD:

USB-RS-232C INTERFACE

Got a modern computer and want to run an RS-232C device? Here's how you can do it!

2014 CATALOGUE

NEW FOR 2014

Check out our 3D cover with bonus 3D glasses

OUT NOW!

WANT A FREE* COPY?

- 7200+ products, 548 pages, 600+ NEW products

With every order of $30 or more placed via our TechStore website, you can get a copy of this great NEW catalogue absolutely FREE! Just ask for it in the comment field as you check-out.

*Offer valid until 23/04/2014.

Jaycar Electronics
Better, More Technical

USB Port Voltage Checker Kit

An easy way to test a USB port to see if it is dead, faulty or incorrectly wired to help prevent damaging a valuable USB device you plan to connect. Voltage is indicated using three LEDs. Kit supplied with double sided, solder masked and screen-printed PCB.

KC-5522

$29.95

Motor Speed Controller Kit

NEW

An improvement on our successful KC-5478 Motor Controller Kit. Designed for controlling typical brush motor tools such as electric drills, saws and routers. The new design is easier to build and features soft start and improved overload protection.
Kit supplied with double-sided PCB.

KC-5526

$149.00

Do Not Disturb Phone Timer Kit

Stop intrusive phone calls when you don't want to be disturbed. Set the timer duration to one of five settings between 15 to 120 mins and the caller will get an engaged signal until the timer times out. Kit supplied with silk-screened PCB, black enclosure.

KC-5521

$29.95

Jacobs Ladder MK3

A spectacular rising ladder of bright and noisy sparks for theatre special effects or to impress your friends. This improved circuit has even more zing and zap than it's previous design from April 2007 and requires the purchase of a VS Commodore 12V ignition coil.
Kit supplied with silk-screened PCB.

KC-5520

$49.95

ATTENTION KIT BUILDERS

Can't find the kit you are looking for?
Try the Jaycar Kit Back Catalogue Our central warehouse keeps a quantity of older and slow-moving kits that can no longer be held in stores. A list of kits can be found on page 54 of our catalogue or our website. Just search for "kit back catalogue".

Prices valid until 23/04/2014

To order call 1800 022 888 **www.jaycar.com.au**

Contents

SILICON CHIP

Vol.27, No.4; April 2014 www.siliconchip.com.au

Features

14 Autonomous Ground Vehicle Competition
University students from all over Australia pit their designing, building and programming skills to "drive" a driverless vehicle around an obstacle course. No human intervention allowed! – by Dr David Maddison

22 So You Think You Can Solder?
It's a critical skill for electronics professionals and hobbyists but most of us have had no formal training in soldering. An IPC soldering training and certification course taught us far more than we ever expected – by Nicholas Vinen

27 Review: Thermaltronics TMT-2000S-K Soldering Station
Professional soldering station has Curie-point regulated induction heating for fast thermal recovery and accurate temperature regulation. It also features automatic shutdown when the iron is in the workstand – by Nicholas Vinen

Projects To Build

30 40V Switchmode Bench Power Supply, Pt.1
New design combines switchmode and linear regulators for high efficiency and low output noise, with up to 5A output. It has voltage and current meters, adjustable current limit with display, 12-24V DC input and a front panel load switch – by Nicholas Vinen

56 USB-To-RS232C Serial Interface
Want to connect an older test instrument or PC peripheral fitted with a 'legacy' serial RS-232C interface to your late-model PC or laptop? Here's the solution: build this USB-To-RS-232C serial interface – by Jim Rowe

66 A Rubidium Frequency Standard For A Song
Want to make laboratory-standard frequency measurements? It's now possible for a very low price; just buy a used rubidium-vapour frequency standard on-line and build our simple power supply and buffer circuit – by Jim Rowe

Special Columns

38 Serviceman's Log
Musical instruments: a whole new ballgame – by Dave Thompson

53 Salvage It!
Harvesting old printers for parts – by Bruce Pierson

62 Circuit Notebook
(1) PICAXE-Based Music Box or Doorbell; (2) 2-Cell Lithium-Polymer Charger Has Balancing Feature; (3) Three-Decade Timebase Period Divider

82 Vintage Radio
Made in New Zealand: the 1957-60 Pacemaker radio – by Dr Hugo Holden

Departments

2 Publisher's Letter
4 Mailbag
75 Subscriptions
80 Product Showcase
88 Online Shop
90 Ask Silicon Chip
95 Market Centre
96 Notes & Errata

Autonomous Ground Vehicle Competition – Page 14.

40V Switchmode Bench Power Supply – Page 30.

USB-To-RS232C Serial Interface – Page 56.

A Rubidium Frequency Standard For A Song – Page 66.

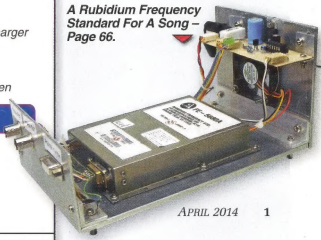

SILICON CHIP
www.siliconchip.com.au

Publisher & Editor-in-Chief
Leo Simpson, B.Bus., FAICD

Production Manager
Greg Swain, B.Sc. (Hons.)

Technical Editor
John Clarke, B.E.(Elec.)

Technical Staff
Ross Tester
Jim Rowe, B.A., B.Sc
Nicholas Vinen

Photography
Ross Tester

Reader Services
Ann Morris

Advertising Enquiries
Glyn Smith
Phone (02) 9939 3295
Mobile 0431 792 293
glyn@siliconchip.com.au

Regular Contributors
Brendan Akhurst
Rodney Champness, VK3UG
Kevin Poulter
Stan Swan
Dave Thompson

SILICON CHIP is published 12 times a year by Silicon Chip Publications Pty Ltd. ACN 003 205 490. ABN 49 003 205 490. All material is copyright ©. No part of this publication may be reproduced without the written consent of the publisher.

Printing: Hannanprint, Noble Park, Victoria.

Distribution: Network Distribution Company.

Subscription rates: $105.00 per year in Australia. For overseas rates, see our website or the subscriptions page in this issue.

Editorial office:
Unit 1, 234 Harbord Rd,
Brookvale, NSW 2100.

Postal address: PO Box 139,
Collaroy Beach, NSW 2097.

Phone (02) 9939 3295.

Fax (02) 9939 2648.

E-mail: silicon@siliconchip.com.au

ISSN 1030-2662
Recommended and maximum price only.

Publisher's Letter

Green energy schemes are too costly for Australia

Who has not reacted with indignation and dismay on seeing their latest electricity bill? In spite of all you may care about the environment and how careful you might have been in reducing your electricity consumption, your bills have still climbed relentlessly over the past six years or so. And while there is be a lot of blame-shifting for all the rise in electricity costs it seems clear that much of the rise has been due to government-mandated green energy schemes. The main beneficiaries of these schemes are the promoters of wind and solar energy and those who provide back-up gas-fired powered stations; not forgetting those thousands of people who have installed solar panels and now receive a feed-in tariff. Meanwhile, every other electricity user has to pay the piper. In addition, the misnamed carbon tax legislation is clearly adding a significant burden on Australia's manufacturing, transport and tourism industries.

Of course, we are not the only country to feel the high cost of green energy. Consider Germany where the government has turned away from nuclear power and spent billions of taxpayer funds on various green energy schemes, including a very heavy investment in solar power. But Germans are seeing the error of their ways and moving to cut the enormous subsidies. At the same time, plenty of German manufacturing companies are going "off grid" and generating their own power.

Germany is not the only European country counting the cost of green energy schemes, with Spain probably being the one that has borne the highest cost. Note that Spain does have an advantage with high solar irradiation but even so the cost has been enormous for the Spanish economy. Solar power seems very attractive, especially to readers of SILICON CHIP, but its implementation as a source of power to the grid has been extremely expensive, in Australia and elsewhere.

So what about Australia with its expensive schemes? Clearly, the Federal and State governments should do as much as they can to unwind as many of these schemes as they can. While they may have reduced overall electricity consumption, they have done little to reduce our overall emissions of carbon dioxide and nothing at all to reduce global warming. In fact, while the carbon dioxide content of the planet's atmosphere continues to climb (currently sitting very close to 400 ppm; up by a piffling 20 ppm from 2004), global temperatures do not seem to have increased at all for more than a decade. Nor have polar icecaps melted, glaciers disappeared, cyclones and tornadoes increased in number or severity, coral reefs have not died (but thrived) and so on.

In spite of that, Australia's Climate Authority, the Bureau of Meteorology and the CSIRO continue to put out ever more frantic reports about warming in Australia over the last year or so while conveniently ignoring the apparent cooling, particularly over the last few winters, in the Northern Hemisphere. Has nobody told them that even if Australia's man-made carbon dioxide emissions were suddenly eliminated, that it would have virtually no effect on the continuing increase in the carbon dioxide content of the atmosphere?

But the Climate Change Authority is calling for Australia to cut emissions by 19% below 2000 levels by 2020, in just six years time. That is ignoring the fact that Australia's population will have increased over the 20 year period (from 2000 to 2020) by about 5 million people which means that the emission reduction per head of population would be even more severe. It's just not going to happen.

Ideally, Australia should rid itself of any green energy measure which reduces our economic growth and causes more unemployment. If coal-fired power stations are the cheapest source of electricity in Australia we should continue to use them at the maximum and build new stations as and when required. And while I would prefer to see nuclear power stations built in Australia (as China clearly intends in their country) that might not be possible in the near future unless many environmentalists drop their objections.

Leo Simpson

Easy. Powerful.
The R&S®RTE: Simply more scope.

Quickly master everyday T&M challenges.
More confidence in your measurements, more tools and fast results, more fun to use – that's the R&S®RTE oscilloscope from Rohde&Schwarz. From embedded design development to power electronics analysis to general debugging, the R&S®RTE offers quick solutions for everyday T&M tasks.

See for yourself: www.scope-of-the-art.com/ad/rte
sales.australia@rohde-schwarz.com

MAILBAG

Letters and emails should contain complete name, address and daytime phone number. Letters to the Editor are submitted on the condition that Silicon Chip Publications Pty Ltd may edit and has the right to reproduce in electronic form and communicate these letters. This also applies to submissions to "Ask SILICON CHIP" and "Circuit Notebook".

Demise of the Australian car industry

The Publisher's Letter in the December 2013 edition of SILICON CHIP is quite wrong in its summation of the main reason for the impending demise of the Australian car manufacturing industry: it is not due to a lack of domestic sales, it is due to a lack of export sales.

The irony of me writing this is that both Ford and Holden do quite well here in New Zealand but the combined market size of New Zealand and Australia is still quite small. Apart from some minor, rather tentative and short-lived forays into foreign markets. Australia has had no substantive presence in foreign markets outside of the Australasian zone.

Why is this? Is it that Australian car companies are just plain bad at marketing? We will never know for sure. But perhaps the real reason is that the multi-national parents of the local operations dictate the territorial boundaries of where the Australian car manufacturers can sell their cars, thus making the impending demise of Australian car-manufacturing a foregone conclusion.

So can the Australian car manufacturing industry re-invent itself as an indigenous manufacturer of fair dinkum, "made in Australia" vehicles? Well, here's a proposal for you: what about a web-based downloadable vehicle? No, I don't mean ordering a vehicle from a car sales website, I mean downloadable manufacturing code that can be sent to a 3-D printer.

Before you rush to dismiss the idea as far-fetched we already have someone here in Auckland doing precisely that. He's making his own Aston Martin and has already produced all the panel work – so don't say it can't be done!

The power-train could be a generic module, along the lines of GM's 'skate' concept or a VW floor-pan, and could come in any nominated 'flavour': electric, hybrid, petrol, diesel or even steam (Google "Cyclone Power Technology").

Australia needs to turn towards a new sunrise car manufacturing industry while turning its back on, what is now to be, a mature sunset industry if it is to have any chance of maintaining its standard of living. What this, and other similar ideas require is a high-profile stalwart to champion the idea. Who knows, with much fettling and refinement, a new and transformed Australian car manufacturing industry could emerge by re-casting itself as the automotive IKEA of the South Pacific!

Andre Rousseau,
Papakura, NZ.

Correction on SD card sizes

In your "Core Memory" article in the March 2014 issue, a 4GB microSD card is shown for size comparison and stated to be available in 256GB flavours. They're not. The larger SD cards are, but not the microSDs. Any 256GB microSD claims have been shown to be scams.

Some are simple sweep scams (flood each and every forum), to the more elaborate hacked memory controllers, which "indicate" a larger capacity but fail when you actually try to store data past the valid storage area. That's not even counting the misleading GB/Gb (byte/bit) naming convention that places "256Gb" in the description heading, hoping to attract eyes, then give you a

Cheap internet radio via mobile phone

I read your review of the Altronics A2696 DAB and Internet Tuner in the December 2013 issue. I have recently discovered internet radio and particularly enjoy the big band and swing stations playing music from the 1930s and 1940s, especially Radio Swing Worldwide. I just wish the clubs and pubs I visit would play some of this instead of the modern rubbish they force us to listen to.

I listen via a device which is very simple to use, cost me all of $50 on eBay, is smaller than the Altronics tuner's remote control and produces stereo sound through my hifi system, with no power or audio cables required! It is an 'obsolete' Nokia N8 mobile phone, which has an inbuilt digitally-tunable FM transmitter.

To gild the lily, it acts as a GPS with free maps of the world and turn-by-turn navigation, has an excellent 12MP camera with xenon flash, n-WLAN, a sharp AMOLED gorilla-glass touch screen, fast custom updated operating system, rugged case, 16GB internal storage (expandable to 48GB) and fits easily into my pocket.

I don't know the specifications of the FM transmitter but it sounds fine to my ears. It does need to be within about one metre of your HiFi system's antenna. I can extend the range to about 3m by operating the N8 from its plugpack, the cable of which might act as an antenna.

You can buy the older, clunkier Nokia N97 more cheaply and it also has an FM transmitter and internet radio as standard. It comes with 32GB of memory, great for storing all your own MP3 music for playing via the FM transmitter.

A list of various mobiles which have an inbuilt FM transmitter is at http://tinyurl.com/ppr2ueh

Peter Wood,
Keperra, Qld.

World of Weller

Weller®
World's No. 1 in Soldering

240V Soldering

Butane Powered Soldering

Soldering Stations

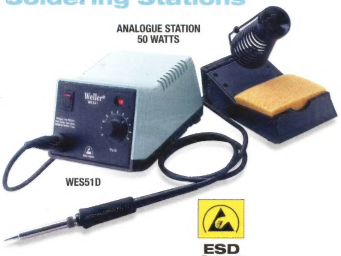

APEX TOOL GROUP

apextoolgroup.com.au
Sales: 02 6021 6666
alburysales@apextoolgroup.com

Mailbag: continued

Debunking expensive PC audio

In the vernacular of talkback radio, I have to say that I'm a long-time listener but first time writer of a letter to the Editor. By 'long-time listener' I mean electronics was my hobby in my pre-teen and teen years in the 1970s and 1980s and I was an avid reader of *Electronics Australia* at the time. I still own the Playmaster 40/40 that I built back in the late 1970s.

In the mid-1980s I proceeded to embark on and complete an engineering degree, which unfortunately after working two years in the building automation industry in Australia gave way to a career in IT – electrical engineering and manufacturing in Australia is not what it once was.

Anyway, I would like to refer you and your readers to an article on one of my favourite technology websites at www.tomshardware.com/reviews/high-end-pc-audio,3733.html

Once again, the golden ear brigade would like us to believe that expensive contraptions are required for true audio enjoyment. I applaud the author of the article as he was not afraid of the sacred cows in his path. Save the money you were going to spend on your golden-ear brigade contraption and spend it on some good headphones and speakers. That's what matters.

George Janczuk,
Sydney, NSW.

much more conservative 32GB in the details. Technically that's not a scam but is misleading at the least.

So what's the truth? Last I read, Sandisk will be releasing their 128GB Ultra microSDXC card exclusively through Amazon and Bestbuy (at first), though both appear to have them presently available only on "back order". The Sandisk website has more information, along with press releases on the card.

For what it's worth, I used to work on core memory boards early in my career (among other more modern technology) and it still amazed me that they managed to get the things to work. Yet, I wouldn't bat an eyelid that the more modern static RAM and battery that replaced it took up only a tiny part of the original-sized PCB.

John Tserkezis,
Croydon Park, Vic.

Core story a nostalgia trip

Brian Armstrong's nostalgic story on core memory in the March 2014 issue was a real hark back to the past, even earlier than the 1974 example. I recall the core stores used in Ferranti's range of Argus computers which were developed for the process control industry. Because the stores were so fine in detail, they were made by the lace makers in Portugal; quite a marriage of old and new technology. They were 14-bit stacks with planes mounted piggyback and about the same size in plan as those shown in the card. I do not think that there were 14 planes but I cannot recall the actual topology.

In those days, most programming was in machine language. Let's admit it, to cram 21 three-term loops, set point and alarm display etc into 2k of store could not have been achieved otherwise. This example was for control of a cement plant where the buyer reserved the other 2k of the 4k for modelling the kiln!

Sebastian de Ferranti decided to develop a series of Argus computers at the Wythenshawe factory where I worked in the late 1950s and 1960s. The application to an ICI plant at Fleetwood was the first Direct Digital Control (DDC) computer system in the world. IBM would have otherwise but theirs was a supervisory system using conventional three-term analog controllers. The development led to the design of a minicomputer, the Argus 400, which could be housed in a desk drawer. Eventually, the A500 and A600 were produced.

But this all started when Sebastian won a contract to develop a semi-active anti-aircraft missile called the

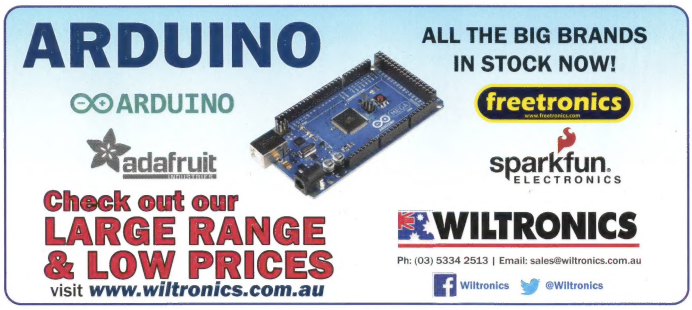

APEM

THE BROADEST OFFERING
IN THE MAN-MACHINE INTERFACE MARKET

MORE THAN
50 000 PRODUCT
PART NUMBERS

MORE THAN
41 MILLION PRODUCTS
PRODUCED EVERY YEAR

CUSTOM SOLUTIONS
ENTIRELY DEVELOPED TO
CUSTOMERS' SPECIFICATIONS

JOYSTICKS

PANEL
MOUNTED SWITCHES

PCB
MOUNTED SWITCHES

SWITCH PANELS

LED INDICATORS

Control Devices

Joysticks • Control Grips • Sensors • Encoders • Custom Electronics • Switches

www.controldevices.net

Sydney, Australia

Unit 5, 79 Bourke Road,
ALEXANDRIA NSW 2015
T: + 61 2 9330 1700
F: + 61 2 8338 9001

Perth, Australia

Unit 4, 17 Welshpool Rd,
ST JAMES WA 6102
T: + 61 8 9470 2211
F: + 61 8 9472 3617

Auckland, New Zealand

5E, 14 Waikumete Road
Glen Eden 0602
T: 0800 443 346
F: + 64 09 813 0874

A WORLD OF
SWITCHING CAPABILITIES

The Convenient All-in-One Solution
for Custom-Designed Front Panels & Enclosures

ONLY
90.24 USD
with custom
logo engraving

You design it
to your specifications using our FREE CAD software, Front Panel Designer

We machine it
and ship to you a professionally finished product, no minimum quantity required

- Cost effective prototypes and production runs with no setup charges
- Powder-coated and anodized finishes in various colors
- Select from aluminum, acrylic or provide your own material
- Standard lead time in 5 days or express manufacturing in 3 or 1 days

FRONT PANEL EXPRESS
FrontPanelExpress.com
1(800)FPE-9060

Save Up To 60% On Electronic Components

Only $15.65

Ultrasonic Range Finder
* Measures up to 3m
* Suitable for Arduino and most microcontrollers
* No set-up required

Only $13.55

Mini USB Board
* Includes FTDI FT232RL USB to UART converter
* Easy USB interfacing for your microcontroller system
* Suitable for both 3.3V and 5V microcontrollers

Dual Solar Battery Charger
* Automatically switches from one battery to the other, once charging is complete
* High efficiency charging with PWM
* Suitable for both 12V and 24V systems

Only $45.04

We are your one-stop shop for Microcontroller Boards, PCB Manufacture and Electronic Components

www.futurlec.com.au

Mailbag: continued

Too many acronyms in SILICON CHIP?

What does NSW mean? If you live in Australia, of course, it is an acronym for New South Wales. What about WA? Again, Western Australia. But if you were talking to someone in the USA (United States of America), WA would mean Washington State.

Sure, we are living in a world which is advancing, in a technological sense, at an unbelievable rate. If people writing articles were to spell out every reference and technical term in full, their work would become clumsy and lengthy. How does an author decide when to use an acronym and when to spell the whole thing out in detail? It is a matter of judgement. The author has to take into account the background of the likely reader and make a decision.

Now to get personal. I am a professional engineer of some standing and a constant reader of SILICON CHIP. But there have been a number of articles published over recent months that I have found difficulty in absorbing because of the barrage of abbreviations. And these are on subjects which interest me greatly!

In a conversation with a professional colleague, a subscriber to SILICON CHIP, his comment about the article entitled "More Reception Modes For The SIDRadio & SDRs" in the December 2013 issue was that "it may as well have been in Mandarin for my understanding".

So maybe some articles should incorporate an explanatory table. I know that it would be a major task but would you consider designing and publishing a list of abbreviations for technical readers?

Maurie Findlay, MIEAust,
Badgerys Creek, NSW.

Comment: as you suggest, if articles were to spell every reference and technical term, they would become clumsy and lengthy. We are constantly aware of this problem of increasingly abstruse jargon and abbreviations and we do attempt to mitigate it as much as possible. Some readers have suggested that we publish a glossary for every article or even every issue but that would quickly become a major exercise.

Bloodhound. He argued strongly for a cost-plus contract in view of the risk involved but was forced into a fixed contact. The Bloodhound turned out to be the most successful missile of its time and was bought by many countries including Sweden, Switzerland, Singapore and of course the UK.

Unfortunately, when the UK government audited the books, Sebastian was forced to refund 4 million pounds as they decided he had made too much profit out of a fixed price contract! On a recent trip to Woomera, where I also worked on the Bloodhound system, it was disappointing to see little reference to the Bloodhound, with quite erroneous descriptions of the missiles developed there.

The museum incorrectly states that the English Electric

Thunderbird was also known as the Bloodhound when in fact the two missiles were in direct competition with each other. No need to guess which won the race! When most missile development programs were axed by the UK government, Sebastian turned his attention to the continuing development of process control computers in conjunction with ICI who committed to buy five systems. Following this, a wide variety of projects was undertaken, from engine test bed control, paper machine control, mass spectrometer data acquisition etc.

The A100, 200 and 300 were all of conventional discrete component design but the A400 used Ferranti Micronor integrated circuits. The rapid development of this computer was due in large part to the production of the integrated circuits in house. If a designer wanted a particular logic function, he just went down the corridor, agreed the specs and a week later it was available.

On a final note, Brian compares the size of his 4k store with a modern 4GB store. At that time, a hard disk was one metre in diameter, 1MB in capacity and cost 65,000 pounds.

Thanks for a great magazine; always interesting.

Dave Williams,
Kureelpa, Qld.

Comments on LED lighting

In regards to some recent comments on LED lighting, I would like to pass on my own observations. In my house I have fitted bayonet-capped warm white OSRAM LED lights in the toilet and hallway, bathroom (the bathroom also has an 18W fluoro above the washbasin) and the outside front and back porch lights. The two hallway lights hang down from the ceiling about 500mm and the other lights are fitted in lamp-holders at ceiling level.

These lights perform well for the intended function of providing adequate light with instant full output at switch-on, particularly of note during the winter months.

Other rooms except the kitchen use compact fluoros hanging down about 600mm from the ceiling and as such provide excellent lighting with little shadowing effect due to light being reflected off the ceilings. These lamps are three Philips 20W warm white in the lounge room and a single 48W Nelson cool white in the other rooms (all bought from Bunnings) and have proved to be reliable.

The small kitchen uses a 36W fluorescent batten fixture which provides more than adequate light with little shadowing. I have tried LED lights in these rooms and I wasn't impressed.

From my observations, the LED lights are suitable for some situations, particularly utility-type lighting, while fluorescent lighting is better for other situations. Also in the lower colour temperature range, fluorescent tubes tend to be more efficient, particularly so with 36W T8, 14W and 28W T5 tubes. These tubes are also cheap and have long life of 15,000 to 20,000 hours and even with a standard magnetic ballast for T8 tubes (which in itself is very reliable) will be more efficient than the LED alternative.

Extra long life high-efficiency low mercury content T8 fluorescent tubes ranging from 18W to 70W are now starting to become available with a service life ranging

Scoreboards and Clocks Made Easy

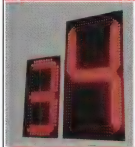

Our D8 series of Super Bright outdoor-visible displays are supported by a growing range of counter, stopwatch and clock circuits. Available in 300mm, 400mm and COMING SOON, HUGE 500mm high digits

Digital Panel Meters at Analogue Prices

KSDVM-30 ULTRA-COMPACT 4.5-30VDC Digital Panel Meter

Features: Bright 0.36" Red LED Digits, Snap-Fit Housing, Range optimized for solar, automotive and trucking applications.

$6.70 inc. GST Plus $7.50 P & P

NEW!! KSDVM-AC 60-500V AC Digital VOLTMETER

Hi Visibility 0.56" digits. Great for monitoring your supply voltage!

$16.35 inc. GST Plus $7.50 P & P

Buy on-line

KitStop electronics – the fun starts here

www.kitstop.com.au

P.O. Box 5422 Clayton Vic.3168

Tel:0432 502 755

Mailbag: continued

from 48,000 hours with a magnetic ballast up to 80,000 hours with a preheat electronic ballast with 10% lumen depreciation over the life of the tube. These specifications exceed a large percentage of LED lamp ratings.

A lot of the LED lights on the market require an electrician to install and when these lights fail will require an electrician to replace them.

Andrew Fraser,
Para Hills, NSW.

Getting better mobile phone reception

I have some comments on the answer to P. M., of Black Rock, Victoria who asked about a Signal Booster for Smart Phones in the Ask SILICON CHIP pages of the February 2014 issue.

P. M.'s weak signal location was not clarified but as Black Rock is a Melbourne outer suburb, its cellular service is assumed satisfactory. Although poor coverage in more rural areas may be distance related, modern 3G can reach to around100km in regions with clear LOS (line of sight) to mountain-top cell sites. This improves on standard GSM, where signal timing issues mean a hard range limit of 35km applies.

Aside from using (possibly) illegal repeaters, simpler factors and approaches may merit consideration. Probably the most fundamental strong signal need at UHF is a clear signal path. For this, elevation above obstacles is often essential. Have local obstructions– metal walls, cliffs, dense vegetation etc – been allowed for? Has an elevated phone and hands-free Bluetooth headset been tried? Just removing the user's shielding hands and head from around the phone may boost signals!

Have other smart phones been tried? Models differ in power, sensitivity and antenna placement. Is the smartphone fully charged?

Have different carriers (Telstra, Optus and Vodafone) been tried? Providers use a range of different frequencies at 850, 900, 1800 & 2100MHz, and the lower frequencies may have superior punch-through of vegetation and obstructing terrain.

Cell tower proximity and performance may also be an issue. Android apps, such as "Open Signal" (https://play.google.com/store/apps/details?id=com.staircase3.opensignal&hl=en) and "Sensorly" allow mapping of cell towers for signal sweet spot location.

Have simple reflectors been tried? Repositioned ground level parabolic satellite TV dishes can usefully boost cell signal levels when beamed at the tower. The phone is used at the (offset) focal point (perhaps in conjunction with a Bluetooth headset).

Has Vodafone's "Sure Signal" femtocell wired broadband approach been investigated? If the location has no wired broadband then a second smart phone could be elevated

Memories of core memory

I worked with core memory back in the 1970s when I taught myself to program in Assembler on an NCR299 and NEAT3 (Cobol/Assembler hybrid) on an NCR399 accounting machine. The NCR299 even had a Check-Digit card (metre square plugged into the backplane) and the technician came out to ensure it was present before I programmed Check Digit verification sequences.

The core memory was great as I could switch the machines off at night, which was the only time I could program due to constant daily use by the operators, and do a hex dump the next morning. The NCR399 even had an "indestructible" Mylar homing loop for the super-size A3 paper tractor mechanism rather than the standard paper loop.

One night, I commenced a hex dump and twang, the Mylar loop snapped. The technician was out early the next morning to replace it as that machine was in constant use for daily cheque drawing.

The NCR399 had triple "flip" cassette handlers so that the operators could change the suite of eight program cassettes on the fly. It took me 16 hours to learn NEAT3 so that I could patch the program for head office. I was given that machine when I left the company. The power supply cage had a 50A regulated output and the machine itself had 22 fans.

Alan Greaves,
St Clair, NSW.

"Rigol Offer Australia's Best Value Test Instruments"

Oscilloscopes

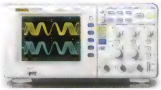

RIGOL DS-1000E Series

- 50MHz & 100MHz, 2 Ch
- 1GS/s Real Time Sampling
- USB Device, USB Host & PictBridge

FROM $339 ex GST

NEW RIGOL DS-1000Z Series

- 70MHz & 100MHz, 4 Ch
- 1GS/s Real Time Sampling
- 12Mpts Standard Memory Depth

FROM $654 ex GST

NEW RIGOL DS-2000 Series

- 70MHz, 100MHz & 200MHz, 2 Ch
- 2GS/s Real Time Sampling
- 14Mpts Standard Memory Depth

FROM $934 ex GST

Function/Arbitrary Function Generators

RIGOL DG-1022

- 20MHz Maximum Output Frequency
- 2 Output Channels
- USB Device & USB Host

ONLY $439 ex GST

NEW RIGOL DG-1000Z Series

- 30MHz & 60MHz
- 2 Output Channels
- 160 In-Built Waveforms

FROM $688 ex GST

RIGOL DG-4000 Series

- 60MHz, 100MHz & 160MHz
- 2 Output Channels
- Large 7 inch Display

FROM $890 ex GST

Spectrum Analyser

RIGOL DSA-815

- 9kHz to 1.5GHz
- 100Hz to 1MHz Resolution Bandwidth
- Optional Tracking Generator

FROM $1,450 ex GST

Power Supply

RIGOL DP-832

- Triple Output 30V/3A & 5V/3A
- Large 3.5 inch TFT Display
- USB Device, USB Host, LAN & RS232

ONLY $460 ex GST

Multimeter

RIGOL DM-3058E

- 5 1/2 Digit
- 9 Functions
- USB & RS232

ONLY $541 ex GST

Buy on-line at www.emona.com.au/rigol

Sydney
Tel 02 9519 3933
Fax 02 9550 1378

Melbourne
Tel 03 9889 0427
Fax 03 9889 0715

Brisbane
Tel 07 3275 2183
Fax 07 3275 2196

Adelaide
Tel 08 8363 5733
Fax 08 83635799

Perth
Tel 08 9361 4200
Fax 08 9361 4300

EMONA

email testinst@emona.com.au

web www.emona.com.au

OCEAN CONTROLS
Helping to get you in Control

Modbus DataLogger
An RS-485 DIN rail mount Modbus Master or Modbus Slave datalogger, logs up to 12 data tags to micro SD card. Battery backed real time clock. Arduino programmable with simple configuration.
SKU:KTA-287 **Price:$149+GST**

IP67 Ultrasonic Sensor
5 m range, compact ultrasonic range finder with 1 mm resolution. Power supply range from 2.7 to 5.5 VDC. RS-232 Serial output. Compatible external temperature compensation sensors is also available in ~ 1 m or 9 m, sold separately.
SKU:MXS-111 **Price:$114.95+GST**

Biolar Stepper Motor
Dual shaft NEMA24 frame size bipolar stepper motor with holding torque of 31 (3.04 Nm or 430 oz-in) 2.8 A current per coil. 6.35 mm diameter front and rear shaft with a flat. 8-wire motor, can be configured as unipolar, parallel & series.
SKU: MOT-128 **Price:$69+GST**

Ethernet Serial Server
Connects an RS-232, RS-422 or RS-485 serial signal to an Ethernet network. 10/100 Mbps ethernet supported. DE-9 serial port. 5 to 30 VDC powered. 5 year warranty.
SKU:ATO-101 **Price:$129+GST**

Optical Rain Sensor
Senses rainfall with no moving parts. 6 different modes of operation, configured via DIP switch. Works as a tipping bucket, skylight rain sensor, wiper control, drop detection or irrigation control sensor.
SKU:HYS-001 **Price:$79.95+GST**

Cerberus USB Cable
A three-headed cable beast that features a single USB-A connector at the host end with USB-b, mini-B & micro-B connectors at the device end. Features a USB hub to allow connection of up to 3 data devices at the same time. The cable is 180 cm/6 ft
SKU:SFC-107 **Price:$6.95+GST**

WAV Trigger
Audio development platform that allows you to easily add music & sound effects to your project. Plays uncompressed WAV files up to 16-bit stereo 44.1 kHz, same quality as audio CDs. File system: FAT16/32. 6 to 15 VDC powered.
SKU:AUD-006 **Price:$57.44+GST**

For OEM/Wholesale prices
Contact Ocean Controls
Ph: (03) 9782 5082
oceancontrols.com.au

Mailbag: continued

Battery backup for security code in Mini Entertainment Centre

It was with some interest I read your article "Build A State Of The Art Mini Entertainment Centre" in the February 2014 issue. I hadn't noticed you had a previous design from 1987 and it was interesting to see how closely our "designs" matched. I've had two car radios in the garage over the years; the first was just screwed under a shelf with separate speakers in boxes.

Last September, having thrown out the first one in a tidy-up, I decided I needed another garage radio and this time I'd make it properly as you can't buy anything really suitable for a noisy home garage/workshop these days. My criteria were that (1) it had to be cheap; (2) it had to be a good performer; (3) it had to receive AM and FM; and (4) it had to fit on my shelf above the bench and not take up too much space.

I got a "free" cassette car radio from an op shop and two 4-inch car speakers for $5. Those and a 12V 4A power supply, some MDF, paint and scraps from my junk boxes turned out the unit shown in the accompanying photos. The chrome handles are there because they looked right!

Both of my garage radios needed a battery back-up for the memory function and the first unit for its security code as well. Briefly, what I did was to open the unit up, find out the processor chip used and then find its application datasheet on the internet. Most of the controller chips have a low-power state where memory is retained and very low current is drawn. The first unit was an Alpine from an old Holden, which also had a security code and was fine with a 2032 button battery and blocking diode fitted appropriately. I calculated the battery should last over a year and it did.

The second unit made last September didn't have a security code but still needed memory backup. Once the application note was examined, the right spot was located to fit a back-up battery. Trial and error showed that at under 4.5V, the CPU drew only about 25µA or so. Above 4.5V and the current increased considerably.

Three AA alkaline cells with a series blocking silicon diode fitted the bill. As a bonus the internal clock kept time as well.

I wasn't worried about hifi sound, so I used a 3mm aluminium front panel and an even thinner aluminium back panel, with no fancy innerbond packing (although I might stuff something in it if I find something suitable for free, seeing how you claimed it improved yours). The speaker grille cloth is part of one of my old blue singlets. Its performance for a cheapie garage radio has exceeded my expectations.

But as the final design of both of our units turned out to be so close, and dedicated to WiFi hotspot duties. Skype-style calls could then be made over WiFi.

Stan Swan,
Wellington, NZ.

Why study engineering when there is no manufacturing?

I have a question to put to you. Why do Australians study engineering and technical courses in this country when it has almost no industry that can employ them? Forget mining; it is a glitch in history.

I have watched the closure of my previous employer plus one of the machining firms that supplied parts, and in the last few months have seen on the news the announced closure of the car assembly lines and the Alcoa aluminium factory. Along with farming (and mining), the manufacturing industry generates wealth. It does not siphon wealth from others. It does redistribute wealth. It does not generate false wealth. It generates real and tangible wealth. But in our modern age, industry generally needs a reasonable degree of high-tech expertise.

This expertise is not taught in universities or TAFE colleges. It can only be gained while working with others

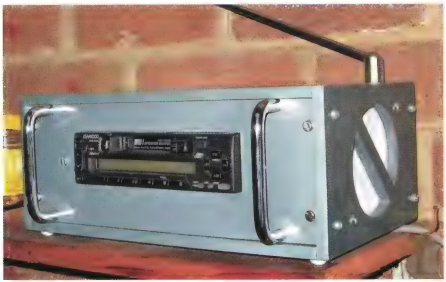

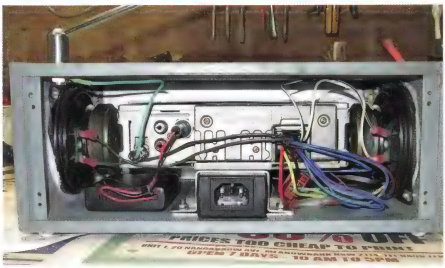

I thought your readers might be interested. Then again, after thinking about it, there's not too many ways you'd put a radio and two speakers in a box, so maybe it's not so surprising.

Barry Leslie,
Winstons Hills, NSW.

who have this expertise. If the companies and businesses who have this expertise do not exist in this country, why deceive the next generation into studying for jobs that do not or will not exist? It seems almost criminal to me.

I am one of the unrecorded unemployed but I am not idle. I am well into creating a prototype service robot. But where are the industries which will enable me to make it in this country? That is what prompted me to send you this email.

George Ramsay,
Holland Park, Qld.

Comment: it is true that large-scale manufacturing is tending to decline in Australia, as it is in most western countries. However, we do not share your gloomy view as there is a great deal of niche and larger manufacturing being carried out in this country and many of the companies concerned do have significant export income.

As far as mining is concerned, Australia has great expertise in this area and you can find Australian companies and mining engineers in virtually every country in the world that has any mining at all, from Mongolia in the northern hemisphere to Chile in the southern. SC

BitScope
Digital + Analog
New Model
Pocket Analyzer
Everything in one tiny 2.5" package !
100 MHz Digital Oscilloscope
Dual Channel Digital Storage Oscilloscope with up to 12 bit analog sample resolution and high speed real-time waveform display.
40 MSPS x 8 Channel Logic Analyzer
Captures eight logic/timing signals together with sophisticated cross-triggers for precise multi-channel mixed signal measurements.
Serial Logic and Protocol Analyzer
Capture and analyze SPI, CAN, I2C, UART & logic timing concurrently with analog. Solve complex system control problems with ease.
Real-Time Spectrum Analyzer
Display analog waveforms and their spectra simultaneously in baseband or RF signals with variable bandwidth control.
Waveform and Logic Generators
Generate an arbitrary waveform and capture analog & digital signals concurrently or create programmable logic and/or protocol patterns.
Multi-Channel Chart Recorder
Record to disk anything BitScope can capture. Allows off-line replay and waveform analysis. Export captured waveforms and logic signals.
Protocol Analyzer
Digital Oscilloscope
Spectrum Analyzer
Compatible with major operating systems including Windows, Linux & Mac OS X, Pocket Analyzer is your ideal test and measurement companion.
bitscope.com/sc

University students in Australian competition . . .

Autonomous Vehicles

by Dr David Maddison

AGVC

Over several days late last year the inaugural annual Autonomous Ground Vehicle Competition (AGVC) was held near Geelong. Open to tertiary students from throughout Australia, it was the first such event to have been held in Australia and its underlying theme was "Autonomous Navigation".

The event was held at the Waurn Ponds campus of Deakin University and was hosted within the Centre for Intelligent Systems Research (CISR) (see www.deakin.edu.au/research/cisr/index.php).

The primary sponsor of the event was Australia's Defence Science and Technology Organisation (DSTO) whose purpose was to promote technological development in the field of robotics in areas in which there were perceived deficiencies in Australia (see box).

One of DSTO's interest in robotics is to improve the effectiveness and safety of Australian soldiers by having semi-autonomous robots relieving them of "dirty, difficult and dangerous" tasks.

Examples of such tasks are defusing of improvised explosive devices as used in Afghanistan, going into contaminated environments, carrying heavy loads, gathering intelligence such as reconnaissance and surveillance; and detecting, designating and even destroying enemy targets.

Currently, much military robotic technology requires "tele-operation" with operators having complete or almost complete control of the robot.

While it is still considered desirable for a human operator to have ultimate

Indicative map of Qualifying Navigation Course. (Based on US IGVC [Intelligent Ground Vehicle Competition] course.)

command of the machine and to make critical decisions such as when and where to engage an enemy target, there is great scope to make a robot more autonomous in many of its activities.

For example, if a robot was required to navigate to a certain location, rather than a human operator guiding every turn of the vehicle, it would be more desirable for the operator to simply instruct the vehicle as to the final destination and the robot would decide the appropriate route to take.

This would result in a change of the human operator being (to use DSTO's terminology) "in-the-loop" to them being "on-the-loop" with ultimate command but the operator being relieved of small decisions and a significant workload.

Such higher levels of autonomy cannot be achieved without more sophisticated algorithms for sensing and decision making. The DSTO's sponsorship of the AGVC aims to encourage the development of such technologies in Australia.

Why hold the AGVC?

The event was intended to explore and develop technologies that will result in improvements in autonomous vehicle related areas, within Australia in which there is a current perception of a deficiency in the following areas:

- Sensor data fusion
- Image and sensor data processing
- Target recognition
- Artificial intelligence
- Knowledge based systems
- Open system architectures
- Machine vision
- Autonomous navigation and mapping
- Modelling and simulation
- Human-machine interfaces and integration
- Computer hardware and software designs
- Mechanical and electronic architectures and systems
- Communication networks
- Developing fast search algorithms
- Multi-vehicle coordination teaming algorithms
- Hardware sensor systems
- Real-time computer hardware and software systems
- Higher level of autonomy
- Multi-robot collaboration
- Target identification and classification.

Competition

The AGVC consisted of three components: Technical Qualification of the robot; the Autonomous Navigation test; and the judges' evaluation of the robot design (Design Competition).

Technical Qualification was designed to ensure that the robot met certain technical and safety standards and could navigate a qualification course.

Such standards allowed for:

- either a commercial robot chassis or a custom designed one;
- that the vehicle be a land-based vehicle with either wheels, tracks or be a hovercraft etc;
- that it fall within a certain size range; it be electrically powered;

A section of Qualifying Navigation Course showing grassy surface (significant, because the uneven texture of the surface causes greater difficulty in implementing edge detection algorithms, especially as the sun angle and cloud cover change), the white lines denoting the sides of course lanes and different coloured barrels as obstacles.

Indicative map of Autonomous Navigation Test course. Note the GPS waypoints set among numerous obstacles in the centre section.

- it be hardware controlled (not software controlled);
- have a mechanical stop button and also a wireless operated stop button (also not software controlled) for safety reasons;
- that it displays a safety light to indicate that the vehicle was both powered and in autonomous mode;
- it had to be able to carry a provided 9kg payload.

Apart from Technical Qualification, the robots had to complete a Qualifying Navigation Course to be accepted into the final competition (Autonomous Navigation Test).

The Qualifying Course was laid out within an approximately 30 x 60 metre grass area and included a track comprised of a pair of painted lines containing straight lines, curves and barrel-shaped obstacles.

Tests that had to be passed were to meet a certain minimum speed requirement of 1.6km/h (maximum speed 16km/h) and to demonstrate lane following by tracking between the marked white lines, obstacle avoidance and the ability to meet a GPS waypoint by navigating around an obstacle. If all tests were passed the teams could progress to the Autonomous Navigation Test.

Additional rules included:

- that vehicles must be unmanned and autonomous and must compete based upon their ability to perceive the environment and avoid obstacles.
- that they cannot be remotely oper-

At left is an example of obstacle navigation, where the vehicle must negotiate all of the barrels without hitting them, at the highest speed it can manage. At right is a similar shot, this time navigating to GPS waypoints.

A variety of shapes and sizes of Autonomous Vehicles was designed and built by various Australian university students. There was even one based on an electric Personal Mobility Vehicle (overleaf)!

ated by a person during the tests all computation, sensing and control equipment must be located on the vehicle and no base stations to improve positional accuracy were permitted (although the use of differential GPS [DGPS] was allowed).

No "remote control"

Vehicles were allowed to be remotely operated so they didn't have to be carried to the start line but that remote operation mode had to be confirmed to be disabled before the start of the competition.

The Autonomous Navigation Test was somewhat similar to the Qualifying test but with more complexity and a greater number of rules.

There was still a minimum speed requirement, many more obstacles, the lane edges could be marked either as continuous lines or dashes, the track width was variable from three to six metres wide, there were inclines and flags to navigate between in the latter part of the course, eight GPS waypoints to navigate to and an increasing level of difficulty as the course progressed.

The first third of the Autonomous Navigation Test comprised of two white lines forming a track on the grass field, various obstacles (ingeniously and inexpensively made from painted compost bins!). After the first GPS waypoint there was "No Man's Land" where there were no structured lines and there were fences and obstacles that the robots had to navigate around to get to an additional seven GPS waypoints.

Within the No Man's Land there was a "Money Barrel", the locating of which would entitle a team a trip to to the IGVC in the USA. If the robots made it to all eight waypoints they could then enter the final third of the course where they encountered

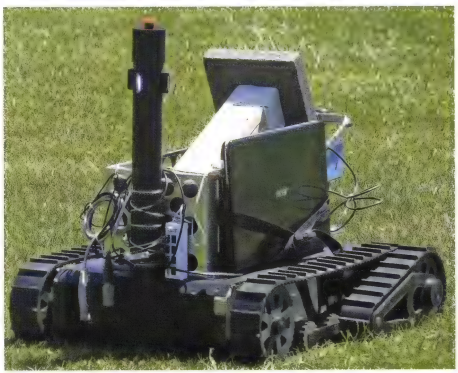

LEVELS OF AUTONOMY

There are no strict definitions of what is meant by robot autonomy (or robots for that matter) but three basic working definitions of autonomy might be considered.

1) **Tele-operation.** A robot responds only to direct human command. A radio-controlled model car or robot to defuse explosive devices is an example.

2) **Semi-autonomous.** A robot is controlled by a human but can perform basic tasks. Automatic parking or automatic braking upon imminent collision in some cars are examples.

3) **Fully autonomous.** A robot is given a task to perform and it does so until countermanded by a human. The CIWS weapon system mentioned in this story is an example.

Of course, any given robot could be operated in any of these modes as required if it has the capability.

another set of marked white lines and further obstacles and flags they had to go between. Various penalties could be issued by the judges such as for holding up traffic, leaving the course, vehicle crash or obstacle displacement, careless driving, side swipe or obstacle touch, student's choice to electronically stop, judge's choice to electronically stop, blocking traffic, loss of payload, passing on the wrong side of a flag and running over a flag.

The most severe penalty was for going too slowly which resulted in disqualification.

Prizes

Ten teams arrived for the competition from all over Australia except Tasmania and the Northern Territory and of these, eight qualified to move onto the final stage.

Judges ranked the entries according to a combination of time taken and distance progressed if the vehicle could not complete the course.

Trophies and cash prizes were available to the top three teams if they completed or substantially completed the Autonomous Navigation course as follows:

First Place: $15,000 plus two economy return airfares to compete at Intelligent Ground Vehicle Competition (IGVC) in the USA (www.igvc.org/) and $2,000 towards expenses,

Second Place: $10,000

Third Place: $5,000.

If no teams completed the course the prizes were first, $5,000, second $3,000 and third $2,000. Unfortunately, despite an outstanding effort by all teams, no one managed to complete or substantially complete the course

ROS

Robot Operating System (ROS) is a Unix-like software framework design for robotics.

It was first developed by Stanford Artificial Intelligence Laboratory in 2007 and remains under development by many groups as an open source software project released under a BSD license.

ROS has two basic parts, one part is the operating system which provides traditional operating system services and the other is a collection of user-contributed packages that provide functionality specific to the research interests of the research group that provided them.

For example, a research group might specialise in mapping, another group may specialise in planning or machine vision. This collaborative approach to software development is essential because problems that seem trivial for a human such as picking up and cracking an egg into a fry pan can be enormously complex to implement in software and no single research group can hope to write software that masters all tasks. The ROS collaborative model allows groups to share and build on each other's work and this allows more efficient software development.

ROS has an architecture based on nodes which individually receive and process sensor, actuator and other data and which can communicate with each other. The ROS library supports Ubuntu Linux while there is experimental support for Fedora and Mac OS X.

As well as the experimental robots, ROS has been incorporated into many commercial models.

this year so the lesser amount of prize monies were awarded.

It should also be noted that extremely minor issues could constitute the difference between success and failure so a technical "failure" should by no means be considered to reflect poorly on any team.

Finally, there was the Design Competition stage in which judges examined design innovations within the vehicles. This required a full written report by the students as well as a presentation before an expert panel.

Prize money for this was, at the discretion of the judges, up to $5,000. Also, at the discretion of Organising Committee, research grants of up to $1,500 were available for any team thought to have a particularly interesting approach.

Teams and their vehicles

The teams were highly dedicated and had typically taken six months preparing the vehicles, all on their own time and often with their own money and all in addition to the high workload of their university studies.

Furthermore, no course credit was received by the students for their work but hopefully that will change in future years.

Dr James Mullins, one of the organisers from Deakin University said "People are very passionate about what they're doing. It's really great to see this happen in Australia. We're seeing a lot of people that previously wouldn't have had as much applied knowledge from research fields being able to put their technology into diverse fields such as machine vision, vision sensors, algorithms, inertial measurement, GPS, and even the base mechanical platforms."

As the team are undergraduate-based with relatively little team sponsorship in this first competition they had to struggle with low cost technologies.

The vehicles

The vehicles consist of several main parts: the chassis, the computing system, the software system and the the sensor suite.

A variety of chassis were used. Some were free as donations (or low cost) such as the base component of an old electric wheelchair containing the drive gear and batteries, with some significant interfacing required to make it work.

Others chassis included the commercially-available Husky A200 from Clearpath Robotics.

Another interesting chassis was based on a personal mobility vehicle (see above).

Computing systems ranged from notebook computers installed in the robots, pc-type computers intended for installation in cars through to embedded logic such as Field Programmable Gate Arrays (FPGAs).

Operating systems used on the robots included various versions of Linux with Robot Operating System and Microsoft Windows,

Most teams used Vision Systems cameras for line edge detection with OpenCV as the software library and most teams also used Lidar for obstacle detection in which a laser scans the environment to build a three dimensional model of the surrounds. (Incidentally, Lidar is not an acronym

Sadly, one robot crashed during the competition. At least the bins (normally used as course obstacles) were readily available . . .

Real Military Robots – Autonomous Ground Vehicles

Military robots are in use right now by many military forces around the world. Most such vehicles are used in aerial operations and can, if necessary, operate with limited autonomy.

Examples include unarmed Remotely Piloted Aircraft (RPA's) such as the Israel Aerospace Industries Heron, as was used by Australian Forces in Afghanistan and armed Unmanned Combat Aerial Vehicles (UCAVs) such as the General Atomics MQ-9 Reaper or MQ-1 Predator as used by the United States in various theatres as well as many other Unmanned Aerial Vehicles (UAVs) in a great variety of forms with many different functions and capabilities. (See SILICON CHIP article "The Avalon 2013 Airshow", May 2013.)

In comparison to air vehicles there are far fewer types of Autonomous Ground Vehicles, possibly because navigation on the ground is far more complex than in the air, simply because there are far more objects and varying conditions on the ground that need to be taken into account. In comparison, most flying is done in a straight line and objects are relatively few and easily seen via well-developed sensors such as radar.

A principle of unmanned armed vehicles and platforms is that there is always a human with ultimate command authority in charge. This remains true although the concept is a little stretched in the case of the Phalanx Gatling Gun Close In Weapons System (CIWS, pronounced sea-whiz).

This is a relatively old US-developed weapons system (introduced 1978, but upgraded many times) that has been in use by Western navies, including Australia's, for decades. It is intended as a last-ditch defence when an enemy has penetrated outer layers of security.

Once armed, it is programmed to automatically destroy incoming missiles, aircraft and other hostile incoming projectiles by firing 20mm rounds through a six-barrel gun at the rate of 4,500 rounds per minute with a muzzle velocity of 1,100 m/s. By necessity, once given authority to fire it must operate autonomously as with incoming supersonic projectiles at close range, there is no time for a human to react. It has been considered by the United Nations, unfairly, as a potential "lethal autonomous robot".

Apart from air and ship-based robots there are several land-based military robots in use. Early examples of unmanned tele-operated land vehicles included the Soviet Teletank and the German Goliath tracked mine, both of WWII although neither were considered great successes (see Wikipedia articles).

Example of modern unmanned autonomous vehicles under development include the Lockheed Martin SMSS (Squad Mission Support System with "supervised autonomy" and used experimentally in Afghanistan), the UK/Australian BAE Systems MOATV (Multi-Operated All-Terrain Vehicle) and the Boston Dynamics AlphaDog, a four-legged vehicle (search YouTube for "DARPA LS3" to see various videos) . These systems are intended in a troop support role such as carrying loads or medical evacuation of personnel.

An Israeli company called G-NIUS has developed a series of security, patrol, combat support and combat AGV's known as Guardium for a series of wheeled vehicles and Avantguard for a series of tracked Unmanned Ground Combat Vehicles (UGCVs).

The vehicles feature autonomous mission execution, real-time obstacle detection and avoidance, fail-safe systems and off-road maneuverability. They can also carry extensive sensors suites as well and some can carry up to 300kg of soldier's equipment or other payloads. Unarmed Guardium vehicles are in everyday use for border patrols and other activities.

The Israeli G-NIUS Guardium Mk II AGV. Note the variety of sensors.

OpenCV (Open Source Computer Vision Library) is another open-source project like ROS and it can be used under a BSD license.

It is a programming library for machine vision applications written in C++ and supporting many operating systems.

Originally developed by Intel in 1999, it is now is run by a non-profit foundation. It has an extremely strong user base around the world.

OpenCV runs on popular operating systems such as Windows, Android, Maemo, FreeBSD, OpenBSD, iOS, BlackBerry, Linux and OS X.

as commonly thought but a combination of "light" and "radar").

Challenges

The competition bought together students with a wide variety of specialised interests, encouraged teamwork and innovation and helped further establish a technological basis for autonomous ground vehicle development in Australia. There were many challenges to be overcome.

One of the main challenges was detecting the white lines under a variety of lighting conditions, such as sun angles and sunny or overcast conditions as well as a varying texture of the grass or dirt surface upon which the white line was painted.

Dr James Mullins said: "Challenges are in their vision systems. A lot of teams are trying to do this with relatively low cost technologies because they are undergraduates, it is the first year, they don't have phenomenal amounts of sponsorship as yet ... so certainly the changing light conditions we've had over the last few days have been tricky but that's why we're looking for robust algorithms that can deal with that."

Despite the difficulty in line detection, obstacle detection was possibly more challenging so most teams spent most of their time on that area.

An unwanted consequence of avoiding an obstacle was that the robot might go over a line, proving the importance of the line detection and the obstacle avoidance algorithms working in a cooperative manner.

This year all of the vehicles worked in a "reactive" manner meaning they would respond to their immediate environment but had no knowledge of where they had been. So occasionally, a robot would reverse and return to where it had just come from or do a u-turn and get lost.

Some teams were in the process of implementing mapping to overcome these difficulties but this feature was not fully implemented on any of the robots.

To find the eight GPS waypoints the teams needed a one metre GPS accuracy and most teams used high-accuracy differential GPS (DGPS) with a 70cm accuracy.

The future

It is planned that the AGVC will be run again next year, bigger and better.

The teams were very excited about next year's competition, already discussing what they want to do.

Some teams are talking about fully implementing mapping so the vehicles have knowledge of where they have already been.

It is expected that more teams will compete and that the level of technology will be greater. No doubt there will be some surprises as well! SC

Winners are grinners . . .

Winners of the Autonomous Navigation Test component, Order 66 from Deakin University.

Team Name	Affiliation	Design Test Score	Auto-Nav Score	Overall Ranking
Trial & Error	ANU	750.9	Did not qualify	6
Order 66	Deakin Uni	864.5	84	1
Dynamic	RMIT Team 1	647.1	55.5	5
Team Redback	Flinders Uni	824.6	11	4
Aperire Incognitam	Deakin Uni	813.9	48	3
Team UQ	Uni of Qld	665.5	Did not qualify	0
dUNSWiftly	UNSW	762	108.5	2
UWA Robotics	Uni of WA	661.7	21	0
Team Zelos	Uni of Adelaide	747.8	5	0
Team Tesla	RMIT Team 2	651.4	39	6

Innovation Award: Trial and Error (ANU)

So you think you can SOLDER?

by Nicholas Vinen

It's a critical skill for electronics professionals and hobbyists but many of us have minimal or no formal training in soldering. To find out what we could learn, I attended an IPC soldering training and certification course which is suitable for beginners through to experienced professionals. I learned more than I expected about soldering, rework and PCB repair and there were some surprises too.

If you're going to build or repair any electronic gear and expect it to last (especially in abusive environments such as marine or automotive), you will need good soldering skills.

Bad solder joints are a major cause of failures in both commercial equipment and kits. We've met kit constructors who have gone to the trouble of building a PCB, spent time trouble-shooting it and eventually gave up when the problem was simply a few incomplete or unreliable joints.

To make matters worse, these days many new ICs come only in surface-mount packages; in some cases your only choice is a fine-pitch or even leadless IC.

This means that some projects inevitably require more advanced soldering skills. Many potential constructors feel daunted taking these on but with a little practice and the right tools, it isn't too difficult.

This learning curve is so much less steep if you have guidance from an experienced technician to learn the tricks which make it easy to solder these more difficult devices. These are exactly the sort of skills you will

We spent much of our time at the well-stocked workbenches, practising our technique using the supplied PCBs, parts and consumables. However we also watched some videos, slide shows, live demonstrations and had numerous discussions about soldering theory and techniques. IPC Certified Trainer Andrew Brown guided us through the course, checked our work and gave constructive feedback based on the results.

Day three and with our PCBs complete and working, we practiced terminating wire onto various kinds of PCB terminals. These wires were then soldered to the board as a way to keep them all together. More experienced attendees who finished tasks early were able to try different techniques or ask questions. One unusual tool seen here is a timber-handled hog-bristle brush, used for cleaning PCBs and parts due to the fact that it doesn't generate static electricity.

pick up attending a soldering training course such as the one described here.

I was invited to attend a 3-day course called "IPC-7711/7721 Rework/ Repair Modification". IPC is an international organisation and their name originally stood for the "Institute for Printed Circuits". They now go by the name "Association Connecting Electronics Industries" but still use the widely-recognised initials IPC.

The IPC produces global standards for PCB design, manufacturing and electronics assembly, including soldering.

This training was provided by an IPC Certified Trainer from Chemtools Pty Ltd, at their office in St Marys, western Sydney.

This particular course included removing and replacing through-hole, surface-mount components on a PCB, pad and track repair, PCB laminate repair, wire splicing and conformal coating. However, the exact mix of subjects varies a little, depending on the requirements of the attendees.

I learned a lot at this course but it was also very enjoyable. The group was small, with a total of nine attendees which is typical. This gives a lot of opportunity to ask questions. It also means personal attention and feedback from the trainer.

The other eight attendees ranged from a complete beginner through to experienced service and manufacturing personnel (yes, there are still electronics manufacturers in Australia!).

By the end of the course, the beginner had successfully soldered a wide variety of through-hole and surface-mount devices and went away a lot more capable and confident than just three days earlier.

Some surprises

He obviously got a lot out of the course but so did many of the more experienced members of the group, myself included. One of the aspects I especially liked was the opportunity to try various different techniques for doing the same job.

For example, one part of the course involved soldering a very fine pitched (0.4mm lead spacing) Thin Quad Flat Pack (TQFP) IC. The instructor explained three different methods to solder this part, demonstrated one and stated that we could use whichever we wanted.

I elected to use a method which I had not tried before, which involved placing a thin layer of solder on the pads, locating the IC accurately over them, applying flux and then re-heating the pads (and component leads) with a standard iron so the solder 'reflows' onto the device leads. This is a similar approach to one of the most common commercial soldering methods (infrared reflow) but without needing any special gear.

It was gratifying that this not only worked but as the instructor promised, made a series of near-perfect joints with a minimal amount of solder. He also gave us the option of using solder paste and a hot air gun (ie, the aforementioned reflow technique) or using a "mini-wave" type soldering iron tip.

So even though I have successfully soldered many similar ICs in the past, I came away from the course with some new tricks.

I also got the opportunity to use a "Mantis" 3D microscope for the first time, which is a great piece of gear for fine work and inspection if you can afford it. We were allowed to use it as necessary for placing components, checking placement and inspecting joints.

Lead-free soldering

The IPC-7711/7721 training course is not specific to any particular type of solder alloy or brand/model of tools. It is a general soldering training course and the knowledge gained by the participants can be used with virtually

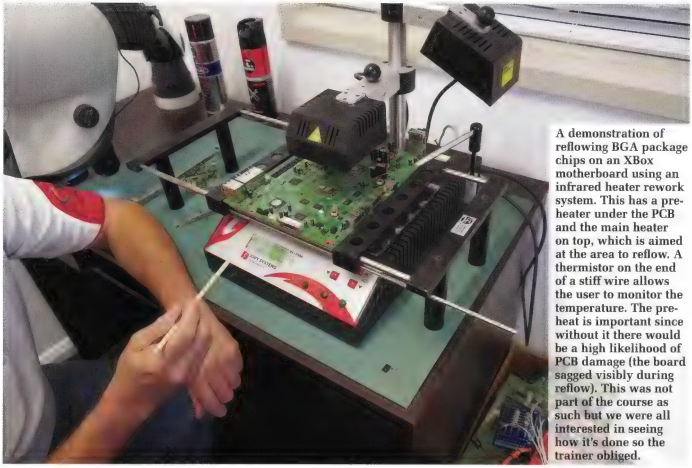

A demonstration of reflowing BGA package chips on an XBox motherboard using an infrared heater rework system. This has a pre-heater under the PCB and the main heater on top, which is aimed at the area to reflow. A thermistor on the end of a stiff wire allows the user to monitor the temperature. The pre-heat is important since without it there would be a high likelihood of PCB damage (the board sagged visibly during reflow). This was not part of the course as such but we were all interested in seeing how it's done so the trainer obliged.

any equipment. But having said that, the Chemtools IPC training courses use lead-free products when possible and it was an eye-opening experience to say the least.

While I have reworked and repaired some commercially-made boards that used lead-free solder, it wasn't much fun because these boards typically use SAC305 lead-free solder (96.5% tin, 3% silver and 0.5% copper). It melts at a relatively high temperature (~220°C), is non-eutectic and forms dull, crystalline-looking solder joints no matter what you do.

That makes solder joint inspection much more difficult and hence requires good technique to give consistent results.

Before going any further, we should explain what "eutectic" means. Solder comprising 63% tin and 37% lead (63/37) is eutectic, which means that it transitions between its solid and liquid states at a single temperature, 183°C.

By comparison, 60/40 solder is fully liquid (liquidus) above about 190°C and solid (solidus) below 183°C. Between these temperatures it is in a semi-solid or "plastic" state and if the joint is disturbed while between these temperatures during cooling, it will form a poor joint with cracks and other problems. Eutectic alloys do not have this in-between state and so are easier to work with.

By comparison, SAC305 lead-free solder isn't too bad, with a plastic range of just 217-220°C but this is still not ideal. Note that this is substantially higher than the 183°C melting point of 63/37.

But it's the dull, crystalline appearance of the solidified joints that is its worst aspect and it's quite expensive too, due to the relatively high silver content.

At the IPC training course we exclusively used a lead-free solder alloy called SN100C, which was developed by Nihon Superior Co of Japan but is also manufactured by AIM Solder. This comprises 99.3% tin, 0.7% copper plus trace amounts of nickel and germanium. It is eutectic with a melting point of 227°C.

Besides the higher melting point, working with SN100C is not dissimilar to working with traditional tin-lead solders. It pays to ensure that the PCB is clean (ie, no oxide contamination) and to use a little extra flux and heat the joints for slightly longer, but it flows smoothly and otherwise behaves the way we are used to with tin/lead solders. So with good technique, it gives excellent results every time, with the shiny-looking fillets we want to see.

In fact, in some tests (such as mechanical strength at low temperatures), SN100C is superior to tin/lead solder. And while we have not used this solder in a commercial environment, with reflow or wave soldering, we suspect it will be better there too, in terms of both reliability and ease of inspection.

One of the bugbears of lead-free solder is "tin whiskers". Without going into a lot of detail, tin whiskers are hair-like outgrowths which occur spontaneously and can cause short circuits while "tin pest" is where tin changes its atomic structure at low temperatures and disintegrates.

Testing has shown that tin whiskers do occur with SN100C but to a much lesser extent than with SAC305 (and generally do not become long enough to cause problems). Tin pest does not occur with either alloy.

To summarise, lead-free soldering is not difficult with the right solder alloy

and correct technique. There's really no disadvantage other than the slightly higher cost of the solder itself (tin is more expensive than lead).

If you want to try it for yourself, Chemtools offer specific lead-free training courses, including shorter courses (one day or half day); more details on this later.

For more information on SN100C, visit www.aimsolder.com/products/sn100c/sn100c

Thermaltronics

As explained earlier, the training course was not about learning to use any particular equipment.

However another notable experience was using the provided soldering irons which were Thermaltronics TMT-9000S stations, similar to the TMT-2000S reviewed elsewhere in this issue.

For full details, see that review but I will say here that I had previously considered buying one of these irons but had dithered over deciding on a particular model.

My experience using them during the course convinced me that I definitely want one, especially now that I am considering switching to lead-free solder as they are particularly suited for that task.

Further experiences

While not actually on the curriculum, I was curious about working with BGA (ball grid array) package ICs as I had never done it before.

They are tricky because all the solder joints are under the IC package itself so they must be reflow soldered. BGAs are widely used in commercial devices because they offer the highest connection density, with some BGAs having upwards of 1000 pads.

BGAs are supplied with small solder balls pre-attached to each land on the underside. When the IC is placed on the board, these balls sit on top of corresponding pads and when heated, reflow and form the solder joints. While tricky to work with, they are not out of reach of hobbyists; they can be soldered in a toaster oven, for example.

Since several of us were interested in how to reflow and remove BGAs and we had finished all the required parts of the training course, we were treated to a demonstration of both, using an infrared solder reflow device.

The part of the course where we

Chemtools products

As stated in the text, the IPC-7711/7721 course I took is not specific to any particular equipment, tools or products and is a general soldering skills course. However, as you may have guessed from its name, Chemtools' primary business is manufacturing and selling chemical products, including solder, flux, cleaning solution, lubricants and so on. Many of the products supplied for the soldering course are their own formulations.

That includes a syringe "AIM Australia" brand (manufactured by Chemtools) flux paste and a spray can of Kleanium Deflux-It G^2 Flux Remover. I was impressed

with the quality of both products. Their no-clean flux gel has a long residence time, is tacky enough to be used to temporarily hold components in place and it sticks around during soldering to provide good wetting, especially during drag soldering. It doesn't have a particularly strong odour, either; some fluxes can produce quite acrid fumes.

I especially liked the Flux Remover. I have never been satisfied with isopropyl alcohol or methylated spirits in the past because they tend to leave behind a white residue and much scrubbing and repeated applications are required; even then it's virtually impossible to get the board completely clean. Not so with the Kleanium G^2 which completely removes flux residue (even when it has burned), leaving a sparkling clean board.

It's a slow-drying formulation so it stays on the board for long enough to really attack any contaminants and leaves you with enough time to blot it (and anything it has dissolved) off before it evaporates. A clean board doesn't just look nice, you need it to be clean to properly inspect solder joints; flux residue can easily mask faults or give the appearance of a solder bridge where there is none.

It even smells nice and has a low toxicity, important for a product which you may use on a regular basis. There are in fact a whole range of Kleanium products (see photo) to suit various different situations, such as when faster drying is required in production environments or for when a more aggressive solvent is required.

Like all the Chemtools products, the Kleanium range is made in Australia. Most of these products can be purchased from element14 (G^2 Flux Remover part code 236636402, AIM Australia flux paste part code 182777202).

The SN100C lead-free solder mentioned in the text can be purchased from RMS Parts in wire or paste form. See the following link for details: http://rmsparts.com.au/productsearch.ews?stocksearch.ewdsearchterm=sn100c

SN100C solder is manufactured by either Nihon Superior Co of Japan or AIM Solder, including AIM Australia (a brand of Chemtools).

learned how to strip and tin wire and make connections to various kinds of terminals was also quite interesting as I had never used a turret, hook or cup terminal before and I learned better methods of stripping and tinning wire than I had been using previously. It may seem like a simple task but there are some serious pitfalls which can cause premature failure of a wire connection.

It was also interesting to get a chance to apply a conformal coating to a PCB. While there is nothing especially difficult about this, I had not done so before, partly because I didn't know what to do to remove that coating later should it be necessary to perform repairs.

I got some helpful hints on what's required for removal and on the benefits of conformal coating, such as much better corrosion resistance in applications where the PCB can be exposed to moisture and condensation.

Other courses

I would definitely recommend the IPC-7711/7721 course to anybody who wants to learn how to solder or improve their existing skills as it covered a wide range of topics including many important techniques.

But you may not necessarily have the time to take a 3-day course or feel that the cost is justified.

Chemtools also offer a number of other IPC training courses including one-day courses which readers may wish to attend. Note that many of these (including the one I attended) consist of a core curriculum and optional modules which teach additional skills and knowledge.

In general, I would recommend including as many modules as possible.

In addition to IPC-7711/7721, the available courses include:

- **Fundamentals of Soldering:** 1-day course includes soldering SMD & through-hole components, cleaning, inspection, equipment maintenance and lead-free soldering. Consumables and tools provided.
- **Introduction to ESD (Electrostatic Discharge):** a 2-hour course covering ESD and ESD mitigation techniques and tools.
- **Advanced SMT & Through-Hole Rework/Repair course:** a 1-day course with the option of a second day for hands-on PCB repair training. Includes soldering fine-pitched packages using a hand-held iron, hot-air wand or infrared equipment, through-hole component removal using vacuum desoldering tools, cleaning, equipment maintenance and lead-free soldering.
- **Lead-free soldering:** 1-day course, covering specific requirements of using lead-free solder as well as general soldering skills.
- **Production Line Soldering:** 1-day or 2 x ½ day course.
- **Acceptability of Electronic Assemblies (IPC-A-610E):** A 3-day course covering skills required to accurately recognise faults in electronic assembly (eg, poor solder joints).
- **Requirements for Soldered Electrical and Electronic Assemblies (IPC-J-STD 001E):** A course covering the processes and procedures for reliable soldering and inspection of through-hole, SMD components, wires and terminals.
- **Requirements and Acceptance for Cable and Wire Harness Assemblies (IPC/WHMA-620B):** Covers crimp termination, insulation displacement connectors, soldered terminations, moulding, potting, splicing, bundling, marking, labelling, solderless wire wrap connections and more.

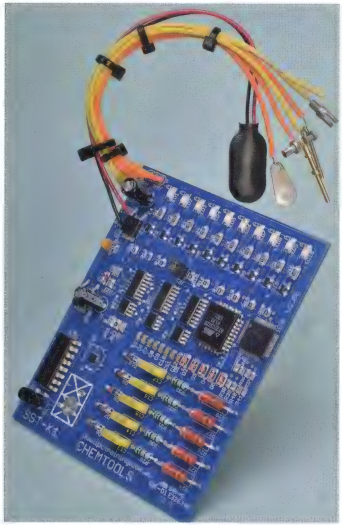

This is the practice board I assembled as part of the training course. As you can see, it has a number of different types of components including various different kinds of surface-mount parts with varying pitches and lead types. We used a variety of different methods to solder these components and inspected the joints to ensure they were formed correctly. We also covered it with a conformal coating (which glows under UV light, so you can check that it is fully covered). This coating has a shiny appearance and protects the board and components from dirt, dust and moisture.

Attendees who complete IPC courses, show satisfactory performance and pass the test are qualified as Certified IPC Specialists. This certification is valid for two years (with the possibility of a 90-day extension to allow for re-certification).

Chemtools travel around Australia, offering courses in major cities at various times.

If you in or near a major Australian city and are interested in attending a course, call them at 1300 738 250 or (02) 9623 3670. Also, check their website: www.ipctraining.com.au

Courses are scheduled when there are enough participants to make a class, so they may be able to offer you a place in a course that has already been scheduled or alternatively, you can wait until one becomes available. SC

This soldering station has Curie-point regulated induction heating to give it very fast thermal recovery and accurate temperature regulation. It also features quick-change tips with spare tip storage, fast warm-up time and automatic shutdown when the soldering pencil is in the workstand.

Review by NICHOLAS VINEN

Thermaltronics TMT-2000S-K Soldering Station

Looking at the photo of the TMT-2000S soldering station, you may be wondering "where is the temperature adjustment"? After all, pretty much all modern soldering stations have a temperature adjustment knob and sometimes a temperature display, don't they?

This one doesn't need a means of adjusting the temperature because it is self-regulating, based on the Curie effect; they call it "Curie Heat Technology".

Essentially, what happens is that the tip is heated inductively by a coil in the handpiece. In the case of the TMT-2000S this coil is driven by the base station at 470kHz. The rapidly changing magnetic field causes magnetic hysteresis losses in a layer of ferromagnetic material near the surface of the tip, heating it up. These losses are caused by the fact that the magnetic field is constantly reversing the polarisation of the magnetic grains within the metal.

Due to the Skin Effect at the high operating frequency, this heating is mostly at the surface of the tip element, ie, just where you want it. Note that while the tip is not within the coil, being in front of it, it is still within its magnetic field and thus in the magnetic circuit.

The Curie effect is the property of metal alloys whereby they lose their magnetic properties above a specific temperature. Once the tip hits its Curie point temperature, without its magnetic properties, it is no longer heated by the magnetic field and so it remains at that temperature.

Since this is a form of 'local feedback', as soon as the tip temperature drops just a few degrees, it starts to draw as much power as it needs (up to 60W) to maintain the set temperature.

Given that the temperature is determined by the tip material, clearly it can't easily be adjusted. But why do you need the ability to do so? The two main reasons to adjust soldering iron temperature are to solder with different alloys that have different melting

points or to compensate for poor thermal regulation at the tip.

In other words, you might want to crank up the temperature to solder a large component with much thermal mass or turn it down when working with small, delicate components.

Regarding the solder alloy being used, even the lowest temperature tips available for this iron (at 325-358°C) are able to melt both tin/lead solder (melting point ~190°C) and lead-free solder (melting point ~220°C).

So there's really no need to adjust it for different types of solder. And because its thermal regulation is very good, due to that local feedback, you don't need to change temperature to compensate for the thermal mass of what you are working on.

So this heating scheme largely mitigates one of the biggest problems with traditional soldering irons which is that if you need a fine tip to work on small components, these have less thermal mass and can lack the 'grunt' needed to solder to ground planes.

If you compensate by increasing the temperature, you risk overheating those small components or burning your flux. With the Thermaltronics irons, the heat capacity of the tip is no longer so critical so finer tips become a more practical proposition.

Having no adjustment knob also means that you can't change the temperature when working on a particular component and then forget to set it back, causing all sorts of potential problems such as dry joints or short tip life.

This is especially good in a production environment as it means that everybody is making joints at the same (correct) temperature.

So how well does it work?

We spent a number of hours soldering with one of these units and never had any problems due to the lack of temperature adjustment.

We were able to make solder joints to large copper areas on a PCB, using high melting-point lead-free solder, in a reasonably quick time and could then move on to soldering smaller components without skipping a beat.

Features:

- ESD-Safe & ESD Compliant
- Ergonomic lightweight handle
- Rugged cast aluminum housing
- Auto-sleep workstand
- Extra thick tip plating for long life
- No need to replace heating coil with tip replacement
- Compatible with PS & MFR series from OKI
- Lowest tip cartridge price on the market
- Tip-to-Ground Potential <2mV True RMS, 50-500Hz
- Tip-to-Ground Resistance, 0.2Ω DC, unit on
- Idle temperature stability ±1.1°C in still air

Ergonomics

We have described the fundamental benefits of this technology but there are other important aspects to a soldering iron, such as ergonomics and tip selection. The TMT-2000S is no slouch in these areas either.

The soldering 'pencil' is actually a bit smaller and thinner than those we are used to (partly because it's no longer so critical to have a high thermal mass) and this is an advantage overall as it makes it easier to angle the tip to get into tight spaces. We also like how the power switch is on the top of the unit, which is convenient for frequently switching it on and off when changing tips.

Tips for Thermaltronics irons come in three different series, which operate at different temperatures (due to varying tip alloy composition) and the temperature for a given tip is indicated by a coloured ring. The coolest have a blue ring, operating at 325-358°C; yellow operate at 350-398°C and red at 420-475°C. In most cases, yellow is what you want.

As an aside, you may be wondering why all these temperatures are so much higher than the 187-220°C melting point of typical solder alloys. The answer is that the more rapid heating provided by a higher tip temperature allows solder joints to be formed more quickly, paradoxically leading to less heating of the board and components as the iron does not need to be left on the joint for anywhere near as long before a good fillet is formed.

Note also that while the temperatures for a given tip series are given in a range spanning 33-55°C, the temperature of any given tip is actually regulated to within about ±1°C. The reason for the wide range is that it is not just the alloy composition but also geometry (ie, size and shape) which determines temperature, as the latter affects the thermal gradient across the outer plating and so on.

Twenty tips!

There are 20 different tips available for the TMT-2000S in each of the three temperature grades, for a total of 60 options. There are six different sizes of chisel tip, six conical, five hoof ('mini-wave'), one bent conical and two knife blades. (The Thermaltronics catalog lists more tips than this but they are designed for backwards-compatibility with other brands of soldering iron and so are of little interest to new purchasers.)

The tips aren't all available through retail channels but Altronics do carry ten different types: two conical, the bent conical and four chisel tips in the standard (yellow) temperature grade and three chisel tips in the high-temperature (red) grade. They aren't overly expensive so you can afford to have a few different types to suit different tasks.

The base station has ten slots for spare tips. If you are planning on working with both tin/lead and lead-free solders, it's important not to get any cross-contamination as the presence of lead can contaminate lead-free joints.

So there's plenty of room to keep separate tips for working with different solder alloys.

Other features

Having a large selection of tips is useless if it's a lot of effort or slow to change tips. Many solder stations require you to switch off, let it cool down, undo a nut, remove the old tip, fit the new tip and then switch on and wait for it to warm up to operating temperature again.

That can take five minutes or more and our response has basically just been to leave the one tip on the iron and use it for all situations as it's too much hassle to change.

Many modern soldering stations now feature quick tip changes and the TMT-2000S is no exception. A silicone pad attached to the pencil lead allows

you to easily pull out the tip while it's still hot and immediately drop it into one of the ten slots in the base. It's then just a matter of pushing one of the other tips home, switching the unit back on and waiting about 10 seconds for it to heat back up.

Total time to swap the tip is under 30 seconds which means you can always be using the right one for the job. And that fast heat-up time applies the first time you switch it on too.

Also, if you place the handpiece in its stand and leave it there, the unit senses this and after a little while, switches off the heater. In fact this model is able to totally power down even if you forget to switch it off, which reduces power consumption and saves the tip.

Our experience is that even the most careful person can occasionally forget and leave the iron on, especially when using it sporadically so this is a welcome feature.

The stand comes with a sponge and brass wool for cleaning the tips but we've been told to hide the sponge and stick with the brass wool for longer tip life. A damp sponge cools the tip too rapidly, cracking in its protective coating ultimately, and causing oxidisation

The second output, shown here, is for compatibility with other brands but if you can find a supplier for these handpieces, in can drive both at once.

As you would expect, the TMT-2000S is ESD-safe too, ie, it won't harm your electronics due to static discharge.

As shown above, it is possible to connect two hand pieces to the base station but the connectors are different. This is primarily intended to let users who already have Metcal or OKI soldering irons make the switch easily. Local retailers do not carry the alternative handpieces and tips so new purchasers cannot easily use the second output.

If you need two outputs, consider the TMT-9000 series, mentioned below.

Conclusion

The Thermaltronics TMT-2000S-K is a top notch soldering iron which suits the type of work that we typically do to a 'T'. Its great temperature regulation, fast heat recovery and quick-tip changes allow you to consistently and quickly make high-quality solder joints.

The TMT-2000S-K soldering station is available from Altronic Distributors for $315 (including GST, Cat T2000), which includes the base station, stand, brass cleaning wool and one chisel tip. They also carry a range of 10 different tips for $20.90 each (including GST). See www.altronics.com.au or call 1300 797 007.

For more information, see the Thermaltronics website (www.thermaltronics.com.au) or phone 1300 738 250 or (02) 9623 3670.

Note that they offer two other types of soldering station, the TMT-5000 series and TMT-9000 series, the latter being also available from Altronics, as well as a vacuum desoldering gun accessory. SC

By NICHOLAS VINEN

Compact Hybrid Switchmode 100W Bench Supply, Pt.1

... has dual voltage and current metering

This very compact bench supply can deliver 0-40V at up to 5A with accurate and fast current limiting and has 3.5-digit 7-segment LED readouts for simultaneous voltage and current display. You can power it from any 12-24V DC supply such as a PC or laptop power supply or lead-acid/lithium battery. It uses a combination of switchmode and linear circuitry to obtain good regulation and low residual noise.

NORMALLY, YOU would expect any adjustable power supply capable of producing up to 40V and 5A to be a great deal larger than this little unit. In fact, it fits into a tiny half 1U rack plastic case. It measures just 209 x 43 x 122mm (W x H x D), not including the knobs and rear terminals. So how have we managed this feat of miniaturisation?

The first point is that it is really just an elaborate regulator and is meant to be powered by a laptop supply or similar. Second, the circuitry is housed on one double-sided plated-through PCB which employs some some surface mount devices and Mosfets selected for low-on resistance to produce very little heat dissipation inside the case.

We have combined the benefits of switchmode and linear regulator

Left: the unit is built into a compact half 1U rack plastic case measuring just 209 x 43 x 122mm (W x H x D), not including the knobs and rear terminals. It comes with the panel meters and load switch already fitted.

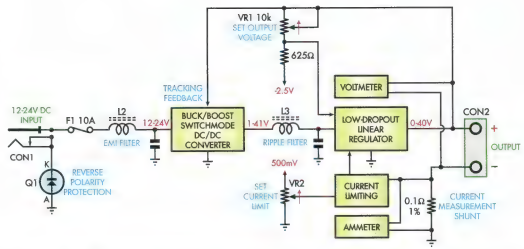

Fig.1: block diagram of the switchmode/linear bench supply. The output voltage is adjusted using VR1 which provides feedback to the low drop-out linear regulator section, which acts to maintain the feedback potential at 0V. VR2 sets the current limit to 0-5A while the buck/boost switchmode section monitors the output voltage of the linear regulator and adjusts its output to provide about 0.7V 'headroom' at the regulator's input.

circuitry. Its output is adjustable over the range of 0-40V and unlike some designs, goes all the way down to 0V. Its current limit is adjustable from 0-5A and has a fine resolution so that low currents can be accurately set. The dual LED panel meters constantly display the output voltage and current and the current limit can be displayed and set without having to short the outputs. It also has a front-panel load switch; this lets you set up the required voltage before switching on power to the load.

Being a hybrid design (switchmode + linear), it has much lower output noise (hash) than a pure switchmode bench supply and also doesn't need a large output capacitor bank that would then be dumped into the load in case of a short circuit. In fact, when the current limit kicks in, the output voltage drops very rapidly and the unit goes into current regulation mode. In other words, it can also be used as a near-ideal current source.

Since it runs off a low-voltage DC input, it can even be used away from 230VAC mains and powered from a car/truck/caravan battery or even a portable battery pack.

The dual voltage/current displays are really handy for a bench supply since you need to able to check that you have set the right output voltage and monitor the current draw while you are performing your tests. It's also quite handy to be able to see what the output voltage has dropped to, should current limiting be activated.

One feature missing from some cheap current-limited bench supplies is the ability to view the current limit setting without shorting the output leads. This is especially useful if you want to adjust the current limit while the load is powered since otherwise you really have no way to know what you've set it to, as long as the load is drawing less current than the limit.

Buck/boost converter

The switchmode-based bench supplies we have published in the past have typically used a relatively large mains transformer to charge a capacitor bank to around 50V. They then used a step-down ("buck") switchmode converter to produce the required output voltage efficiently. This means the supply produces much less heat than a linear design of an equivalent power level.

In this case though, we wanted to fit the supply into this neat case from Altronics which comes with the panel meters and load switch already fitted. That ruled out using a large internal transformer. So we had the idea of powering it from a high-current DC supply which constructors may already possess, such as an old PC power supply or laptop charger. If you're like us, you have a few of these lying around, just waiting to be used for something grand.

PC supplies usually deliver the most current from their 12V output while laptop supplies normally give 15-24V with the most common being 17V. This means that our bench supply needs to be able to step the incoming supply voltage either up or down, depending on the required output voltage. And to be truly useful, it needs to do this efficiently at a reasonably high power level, matching that available from a typical laptop supply (60-100W).

To achieve this, we are using a "buck/boost" switchmode converter. This is similar to the more common "buck" type but it can produce an output voltage that's higher, lower or the same as the input voltage. The particular chip we are using (the LM5118 from National Semiconductor, now Texas Instruments) operates in buck mode, boost mode or an intermediate buck/boost mode, depending on the ratio of the output to input voltages. We'll explain how this works in more detail below.

As a result, this supply can deliver plenty of current at lower voltages, up to about 15V, and then a lesser but still significant current up to the maximum 40V output (2.5A+, depending on the input DC supply voltage & power). Most bench supplies only go up to 30V and while this is sufficient for many tasks, we sometimes find it a bit limiting, hence the decision to go to 40V, even with a reduced current capability.

Performance

As mentioned briefly above, switchmode-based bench supplies always have some of the high-frequency

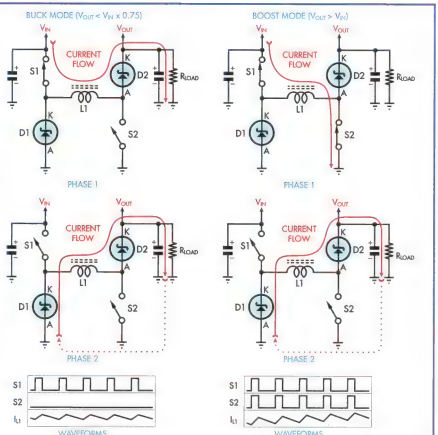

Fig.2: an illustration of how the switchmode converter works, in buck mode (diagrams at left) and boost mode (diagrams at right). The mode of operation is determined by whether S2 (actually a Mosfet) is switched with S1 or just left open (ie, off). In buck mode, as the duty cycle approaches 100%, the output voltage approaches the input voltage. In buck/boost mode, a 50% duty cycle gives an output voltage that's equal to the input, with higher duty cycles boosting the output voltage above the input, approximately doubling it at 75% duty cycle, quadrupling it at 87.5% and so on.

switching components present as 'hash' in the output, while an ideal bench supply should have pure DC with no noise or hash. In many cases, a switchmode-based bench supply will have an LC filter (or possibly a more complex filter involving a differential-mode choke) at the output to attenuate the noise but this is only partially effective and also adversely affects output regulation.

Adding a linear regulator stage after the switchmode stage is a better proposition. This can offer greater noise and ripple rejection and depending on the dropout voltage it operates with, can also result in much better transient load response. In other words, it can cope better with sudden changes in load impedance/current draw, resulting in smaller variations in output voltage under these conditions.

Without getting into a lot of detail, the reason for this is that switchmode regulators tend to be quite heavily "compensated", ie, their "closed loop" bandwidth is purposefully reduced to a few kilohertz. This is necessary because the inductor and capacitors which are used to convert the switching output to a smooth voltage form a low-pass filter which leads to a delay between changes in the switching waveform and changes in the output voltage.

This delay is a form of phase shift; quite a large one in fact. And feedback systems with large phase shifts are unstable unless the gain is limited at higher frequencies. Linear regulators (depending on design) can have much smaller phase shifts, allowing more feedback bandwidth and thus much more rapid response to any changes in the output voltage due to the behaviour of the load.

Having a linear regulator at the output also means that we can implement the current limiting feature there. With the linear regulator's high bandwidth, that means it can provide a smooth current flow even in the face of rapidly varying load impedance and it also means there can be a very small output capacitance, so that there isn't much stored energy that will flow through the load before the current limit is effective. In this case, a 2.2µF output capacitor delivers a maximum of 1.75mJ of energy (with the output set to 40V) into a dead short.

So you can see that combining a switchmode and linear regulator gives us the best of both worlds. Well, it isn't quite perfect – some switching noise will still make it through the linear regulator, for example. However, it's a highly effective combination and a better compromise than either type of regulator by itself. Implementing it effectively is a bit tricky though, as we shall see.

Design concept

Fig.1 is the block diagram which shows the overall design of the supply. The output voltage and current are controlled by the low-dropout linear regulator section, with VR1 adjusting the voltage and VR2 the current.

VR1 forms part of a voltage divider between the output and a -2.5V reference voltage. If the feedback voltage is above 0V, the regulator reduces its output while if the feedback is below 0V, the output voltage is increased. The values selected give the unit a range of 0-40V.

The LDO regulator needs an input voltage that's slightly higher than its output voltage for proper regulation (at least 0.1V but ideally a bit more). As a result, the switchmode converter monitors this output voltage and attempts to maintain its own output at a slightly higher voltage. The 'headroom' is set at around 0.7V, so the output of the switchmode regulator will go slightly above 40V and normally never drops to zero.

An LC filter between the two regulators reduces high-frequency ripple fed to the linear regulator, as its input supply/ripple rejection is best at lower frequencies. There is a similar filter at the input of the switchmode regulator to stop too much noise coupling back to the input and possibly radiating EMI from the input wiring.

A 10A fuse protects the circuit against serious faults, however if

the switchmode section is working normally, its cycle-by-cycle current limiting will mean that the fuse should never blow. Q1 provides input reverse polarity protection; while it operates as a diode, it is actually a Mosfet to avoid reducing the supply voltage too much and wasting a lot of power, as a standard diode would.

The voltmeter is wired across the output terminals while the ammeter displays the voltage across the shunt. Note that the voltage across the shunt is effectively subtracted from the output voltage but the way the feedback network is connected automatically compensates for this (as explained later).

We have used 10-turn potentiometers for voltage and current adjustment as this makes it easier to set these values accurately; we recommend constructors do the same however there is nothing stopping you from using the cheaper 270° rotation pots should you wish.

Buck/boost operation

Most of the switchmode regulators we have published in the past have been one of three types, either "buck", "boost" or based around a transformer. The buck and boost types are the simplest but the former can only reduce the input voltage while the latter can only produce an output greater than the input. Hence the use of buck/boost which gives a much wider range of output voltages.

The LM5118 IC operates in buck mode when the output voltage is less than ¾ the input voltage and boost mode when the output voltage exceeds the input voltage. Between these, it operates in an intermediate mode which is partly buck and partly boost, ie, buck/boost.

Fig.2 shows the difference between the two main modes. At left are the two states used for buck mode. When S1 is on, current can flow from the input straight to the output, via inductor L1 and Schottky diode D2. During this time, L1's magnetic field charges up and the current flow smoothly ramps upwards, at a rate determined by the voltage across L1 and its inductance.

When S1 is switched off (below), L1's magnetic field continues to drive current through the load via D2, but this current can no longer come from V_{IN}, so it must flow through Schottky diode D1 from ground. The dotted line shows how current recirculates – the only source of energy during S1's off time is L1's magnetic field. As such, the current flow smoothly drops, again at a rate limited by the voltage across L1 (now roughly equal to the output voltage) and its inductance.

This cycle repeats and the ratio of S1's on-time to off-time, in combination with the load impedance, determines the ratio of the output voltage to the input voltage, but this is always less than one. Some example waveforms are shown below these diagrams, for a steady state (ie, constant load and output voltage).

Compare these diagrams to those at right, which show operation in boost mode. The difference is that now S2 switches on simultaneously with S1. This increases the voltage across L1 to be the full input supply voltage and this does not drop over time, so L1's magnetic field charges up much faster. Thus, more current is delivered during the off-time (below) and hence the output voltage is higher for the same duty cycle as buck mode.

It stands to reason then that the ratio of the output voltage to the input voltage can be greater than one and in fact, it is inversely proportional to the duty cycle. Thus the maximum output voltage is limited mainly by the maximum duty cycle, which for the LM5118 is related to the operation frequency (as there is a fixed minimum off-time). In our circuit, maximum duty cycle is about 85%, giving a maximum boost ratio of about 4:1, certainly sufficient to get an output of over 40V from an input of 12V.

When in the intermediate mode mentioned above, the only difference is that S2 switches off before S1, thus giving three phases for each cycle, equivalent to phase 1 for boost, followed by phase 1 for buck and then phase 2 (same in either mode). Thus the boost ratio is not as high as in pure boost mode. This intermediate mode means there is no discontinuity in the converter's operation or output voltage.

Circuit description

Now let's turn to the full circuit. Fig.3 shows the main section. At its heart is the buck/boost switchmode converter, controlled by IC1 (LM5118). First let's look at the 'output' side of IC1, ie, pins 12-20. These drive the Mosfets which do the actual switching.

Pin 19 is the high-side driver output which connects to the gate of Q2 (S1 in Fig.2). Pin 20 is connected to the source of this Mosfet, which is the 'floating' node that switches between ground and the incoming supply rail. This pin is used as the ground return for the discharge current from the Mosfet gate and as a negative reference when driving it high, charging the gate to this voltage plus about 7V.

Thus if the input voltage is say 14V, the gate of Q2 must be driven to 21V. To generate this higher voltage, IC1 has an internal charge pump and it uses the 100nF capacitor between pins 18 & 20 to accomplish this. This capacitor is charged to 7V from the input supply when pin 20 is low and current then flows back from it into the Mosfet gate when pin 20 goes high, boosting the pin 18 voltage to the required level. This arrangement is known as a "floating high-side driver".

The low-side (boost) Mosfet, Q3, is driven from pin 15. This does not require a charge pump as its source terminal is connected directly to ground and thus the gate only needs to reach about 5V for full conduction.

Q2 & Q3 are logic-level Mosfets which are switched fully on with a gate-source voltage of 5V. IC1 has an internal 7V regulator with a 1µF output filter capacitor connected from pin 16 to ground and this determines the maximum gate-source voltage fed to the two Mosfet gates. An external supply can be connected to pin 17 (V_{CCX}) but the internal regulator can supply enough current to operate the Mosfets at 350kHz without excessive dissipation (a maximum of about 650mW).

Ground return for the low-side Mosfet driver is pin 14 (PGND) while pins 12 & 13 are used to sense the voltage across a 15mΩ shunt connected in series with the buck recirculating diode, D1. This sets the peak current limit to 125mV ÷ 15mΩ = 8.3A in buck mode and 250mV ÷ 15mΩ = 16.6A in boost mode (close to the inductor's saturation current). The inductor current is sampled just after the Mosfet(s) switch off, when it is at its peak, just after D1 becomes forward biased.

Note that the switchmode arrangement is based largely on the sample circuit in the LM5118's data sheet, which provides a design with similar requirements to ours. We require a maximum boost of 40V ÷ 12V = 3.3 times with an input current of around

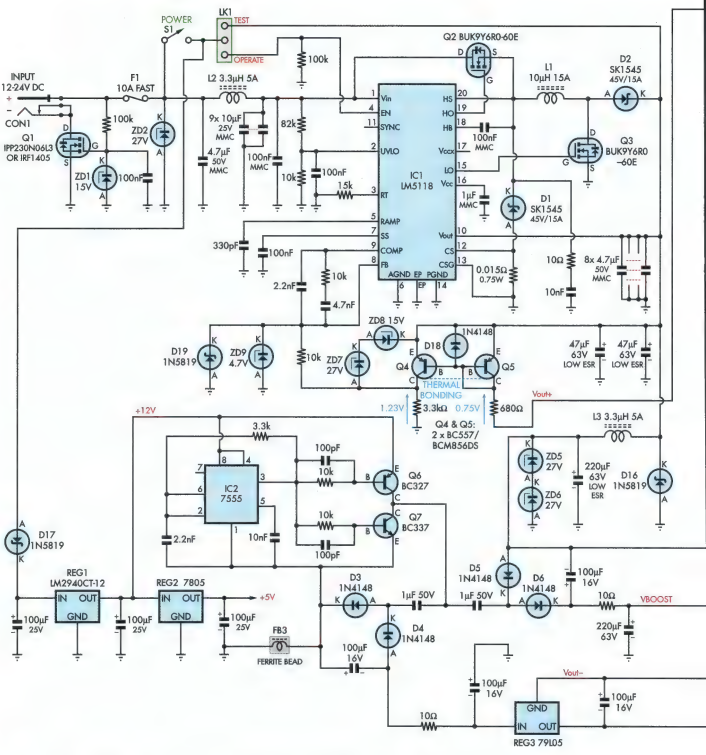

SWITCHMODE-LINEAR HYBRID BENCH POWER SUPPLY

MAIN CIRCUIT DIAGRAM

Fig.3: the main section of the bench supply circuit. IC1 is the buck/boost controller and this drives Mosfets Q2 & Q3 which form the switchmode converter in conjunction with inductor L1 and Schottky diodes D1 & D2. The output then goes to the linear regulator (shown in detail next month) and then to the output terrminals. The output current is checked using a 0.1Ω shunt resistor which is monitored both by the ammeter panel and the current limit circuitry. REG1-REG3 and IC2 generate two extra supply rails for the linear regulator circuitry, one about 10V above the main supply rail (V_{BOOST}) and a -5V rail, using a charge pump driven by Q6 & Q7. VR1 & VR2 set the output voltage and current limit while VR3-VR8 zero and adjust the meter displays, output voltage range and current limit range.

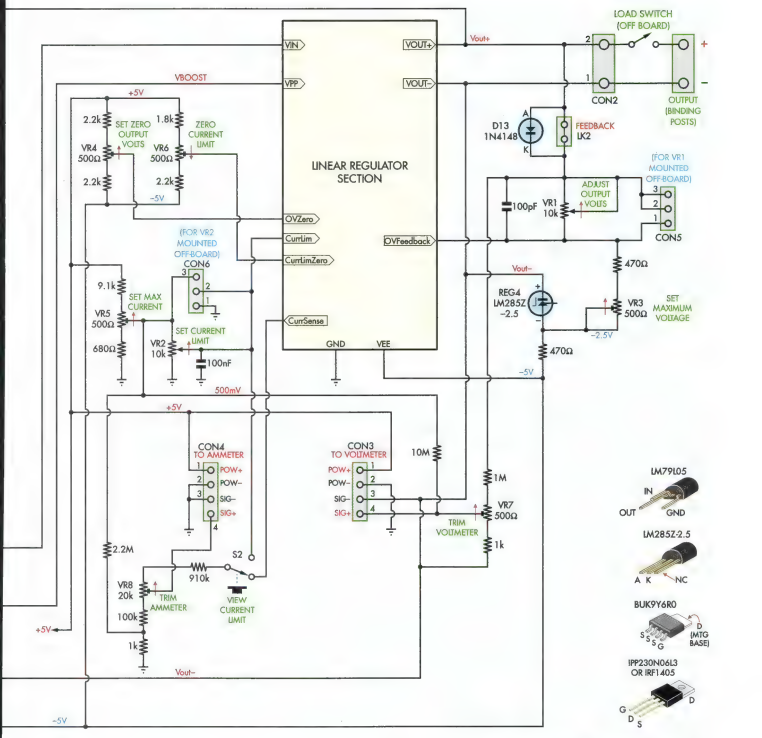

8A (100W ÷ 12V), while their design is for a maximum boost of 12V ÷ 5V = 2.4 times with an input current of around 8A (36W ÷ 5V).

We are using 45V 15A Schottky diodes for D1 and D2 since these are the components in the switchmode section which dissipate the most power. They are relatively compact devices which is important since the PCB layout of this section is critical.

The BUK9Y6R0-60E Mosfets were chosen due to their low gate charge (minimising switching losses), low on-resistance (minimising I^2R power dissipation) and ease of soldering. While the LM5118 data sheet says a snubber is not required, we have fitted one – consisting of a 10Ω resistor and 10nF capacitor in series, across D1 – to reduce voltage spikes and thus EMI

The PCB assembly is designed to mate with integral pillars inside the half 1U rack plastic case. Pt.2 next month has the full assembly details. Note that the final board will differ slightly from this prototype.

during Mosfet switching.

A parallel array of eight 10µF 25V multi-layer ceramic capacitors is used for input supply filtering. This arrangement has a very low ESR and is also relatively cheap. A similar arrangement of nine 4.7µF 50V ceramic capacitors is used for the output, where low ESR is important to minimise ripple. These form a low-pass filter in combination with inductor L1. A couple of 47µF low-ESR electrolytics are paralleled for 'bulk capacitance', which helps switchmode feedback loop stability.

The output of the switchmode regulator passes through another LC low-pass filter, consisting of a 3.3µH bobbin inductor (chosen for its low losses and low price) followed by a 220µF low-ESR electrolytic capacitor. This attenuates the output ripple of the switchmode regulator and this voltage then feeds into the linear regulator (to be described next month).

Feedback & control circuitry

Pin 1 of IC1 is the supply input for its high-side and this is decoupled with a 100nF ceramic capacitor close to that pin of the IC. The resistive divider connected to pin 2 sets the under-voltage lock-out threshold at 11.3V [1.23V x (82kΩ + 10kΩ) ÷ 10kΩ]; while the IC can run from at little as 5V, we want to avoid excessive input current draw at low supply voltages.

The 100nF capacitor at pin 2 sets up the 'hiccup' over-current protection; if a prolonged over-current condition is detected, pin 2 is pulled to ground and this capacitor takes some time to charge to the 11.3V threshold, preventing excessive current draw in case of a prolonged short or other overload.

A resistor from pin 3 to ground sets the operating frequency of the switchmode regulator, with 15kΩ giving operation at around 350kHz. Higher frequencies mean less RMS ripple voltage at the output but in exchange for that, switching losses are higher (due to more frequent transitions at the output). Also, inductors tend to be lossier at higher frequencies.

Pin 4 is the enable input and must be pulled high for the regulator to operate. This is connected to power switch S1 via link LK1, with a 100kΩ pull-down resistor. Thus, when power switch S1 is off, voltage is still applied to the input of IC1 but it is disabled so the output is at 0V. This avoids S1 having to switch a high current. LK1 is used to disable and bypass the switchmode regulator for testing the rest of the circuit independently.

The capacitor connected from pin 5 to ground sets the time constant for the 'emulated ramp compensation'. This value is chosen to match the time constant for the rate of change of current flow through the output inductor (L1) and allows the IC to perform ramp compensation without needing to measure the current through L2. Ramp compensation is required for feedback loop stability at higher duty cycles.

Readers should refer to our article on the LED Dazzler in the February 2011 issue for a detailed explanation of ramp compensation. However, in brief, it involves feeding back a voltage related to the output duty cycle to the input of the error amplifier, in order to avoid the duty cycle oscillating either side of the required stable value without settling down.

Pin 6 is the analog ground pin, ie, the ground return for the components connected to pins 1-9. Pin 7 is the soft start pin and the connected capacitor is charged at power-on, with the output duty cycle being limited until it is fully charged, to prevent the IC from drawing very high input currents while the output capacitor bank is charged.

Pin 8 is for voltage feedback and is the input to the error amplifier. When pin 8 is below 1.23V, the output duty cycle increases and if it is above 1.23V, the output duty cycle is reduced. Normally this is connected to the output of the regulator via a resistive divider, to set a fixed output voltage, or with one resistor replaced by a rheostat or potentiometer to give an adjustable output voltage.

But in this case, we don't want to set the output voltage of the switchmode regulator directly. Instead, we want its output to be slightly higher than that of the linear regulator, so that it has 'headroom' to operate and deal with load transients but without dissipating much power in the linear pass element.

This is achieved using PNP transistors Q4 & Q5. These form a current mirror and their emitters are tied to the output of the switchmode regulator. The difference between this and the output of the linear regulator causes a current to flow through the

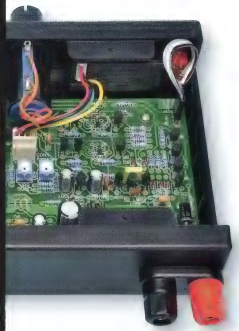

680Ω resistor at Q5's collector. When the difference is 0.75V, that current is (0.75V - 0.5V) ÷ 680Ω = 0.37mA.

Being a current mirror, this also flows through the 3.3kΩ resistor at the collector of Q4 which gives a voltage of 3.3kΩ x 0.37mA = 1.23V, which is IC1's internal reference voltage level. Thus, its negative feedback will maintain the switchmode output voltage about 0.75V above the linear regulator's output voltage. Being effectively a common-base amplifier, this arrangement has very little phase shift and thus does not affect IC1's feedback loop stability.

Note, though, that the output of the switchmode regulator can't drop below 1.23V as this is the minimum, so dissipation in the linear regulator will be a little higher when its output voltage is below 0.5V or so.

ZD7 and ZD8 prevent the output of the switchmode regulator from exceeding 45V in case of a feedback fault. The 10kΩ current-limiting resistor in combination with zener diode ZD9 and Schottky diode D19 protect the feedback input (pin 8 of IC1) from going outside the range of -0.3 to 5V, which would risk destroying the IC.

Diode D18 protects Q4 & Q5 from damage due to base-emitter junction reverse breakdown.

Linear regulator supply rails

The linear regulator requires a positive supply rail (V_{PP}) that is at least 7V above the output in order to switch its internal Mosfet on fully to supply a high load current. It also requires a well-filtered negative rail (V_{EE}) several volts below ground so that it can turn that Mosfet fully off when required (allowing for the voltage drop of several internal driving transistors).

These are supplied from a charge pump shown in Fig.3. This is based on REG1, a 12V low-dropout regulator and IC2, a 7555 CMOS timer IC. IC2 is set up to provide a 12V square wave at 100kHz at its output pin 3. This drives a complementary pair of bipolar transistors, Q6 & Q7, which form an inverting buffer. The 100pF capacitors across their base current-limiting resistors speed up switch-off to prevent cross-conduction.

The buffered output drives two 1μF capacitors, one of which is charged to the switchmode output voltage by D5 and the other which is clamped to ground by D3. When the buffered output of Q6/Q7 goes positive, D6 becomes forward biased and the connected 100μF capacitor is charged to roughly 10V above the switchmode supply rail. Similarly, when the collectors of Q6/Q7 go negative (to ground), D4 becomes forward biased, charging the connected 100μF capacitor to about -10V.

These two new voltage rails are then filtered using RC filters (10Ω/220μF and 10Ω/100μF respectively) to remove most of the 100kHz component, forming relatively smooth DC supply rails. The -10V rail is then regulated by REG3 to a stable and clean -5V for the linear regulator's V_{EE} rail. This regulation is necessary for two reasons: (1) any noise or ripple on this line will affect the regulator's output; and (2) this is also used as the reference for setting the output voltage.

Adjustments & trimming

As stated earlier, the linear regulator acts to keep the feedback voltage at around 0V. This is determined by the output voltage in combination with the position of 10kΩ potentiometer VR1 (Fig.3). This can be a 10-turn potentiometer to give finer output adjustment. It acts as a voltage divider in combination with trimpot VR3 and the 470Ω resistor connecting them.

VR3 is connected to a -2.5V rail, derived from the -5V rail by voltage reference REG4. The circuit will operate without REG4 however it will be subject to output voltage variations due to thermal drift in -5V regulator REG3; REG4 has much better thermal stability and is not dissipating anywhere near as much power either (typically <1mW compared to ~100mW for REG2).

When VR1 is at minimum resistance, the output rail is effectively connected directly to the feedback point and so the output voltage is at 0V. As VR1 is turned clockwise and its resistance increases, the output voltage must increase in order to keep the feedback voltage at 0V. For example, when the resistance of VR1 is around 625Ω, matching that of VR3 plus the 470Ω series resistor, the output is at around 2.5V.

VR3 is used to trim out variations in the other components, giving 40V at the output with VR1 fully clockwise.

The output voltage is fed to VR1 via link LK2 in parallel with diode D13. This is intended to allow for some wiring voltage drop compensation to be used due to the need to run a wire from the output terminal to the off-board load switch, in which case LK2 is removed and a wire is run from the supply side of the load switch to the lower terminal of LK2. In case this connection fails, D13 limits the output voltage from rising more than 0.6V.

The current limit is set using VR2, another 10kΩ potentiometer which can also be a 10-turn type. Its wiper voltage is filtered with a 100nF capacitor and fed into the linear regulator where it is compared with the voltage across a 100mΩ shunt. There is 500mV across VR2, derived from the +5V rail by trimpot VR5. This +5V comes from linear regulator REG2 which supplies several reference voltages but also the power for the two panel meters.

The voltmeter reads the voltage across the output terminals but this is a 200mV full-scale meter so the output voltage is divided down by 1MΩ and 1kΩ resistors plus 500Ω trimpot VR7 for fine tuning. The panel meter's input impedance is 100MΩ so we are using relatively high value resistors here.

Similarly, to get a reading of up to 5A on the ammeter panel, we need a 0-50mV signal and so the 0-500mV from the shunt (at CurrSense) is divided down by a factor of 10 by a 910kΩ resistor, 100kΩ+1kΩ resistors and 20kΩ trimpot VR8. S2 allows the voltage feeding this divider to be switched from the current feedback to the current limit setting, so that the limit can be viewed without having to short the output terminals.

continued on page 96

SERVICEMAN'S LOG

Musical instruments: a whole new ballgame

Dave Thompson*

In a previous life, I played guitar and built and repaired gear used in the music industry. Servicing this type of gear is a whole new ballgame but my experience in the industry means that I can still take on the odd job and make some money.

When someone mentions the word "serviceman", we usually think of someone in a dust-coat hovering over a disassembled TV set, computer or white goods appliance in a workshop lined with test gear. Yet there's one group of servicemen who don't fit this narrow stereotype and who rarely rate a mention outside niche magazine articles. I'm talking about the instrument and amplifier technicians that keep our musicians rocking, rolling, strumming, tickling, picking, bowing and rapping (although obviously the latter has nothing to do with actual music!).

While these shadowy figures are rarely seen, some are very well-known and boast a 'geek' fan base all of their own. They are often found backstage or standing in the wings at gigs, keeping a practised ear on their charges while they are used on stage. These skilled servicemen are a vital link in the huge machine that keeps the music industry sounding the way it does.

Now when someone decides to give playing music a go, they usually start with a rented, borrowed or inexpensive secondhand instrument, just in case they discover they are tone-deaf and don't have a musical bone in their body (not that such handicaps automatically preclude a career in modern music!). Alternatively, a high proportion will quickly give up due to the fact that the instrument they're trying to learn on is virtually unplayable because it hasn't been set up properly. An incorrectly configured instrument really does make repetitive learning and practise much tougher than it has to be!

For example, years ago when I was giving guitar lessons, pupils would bring along their guitars and some of these instruments were in such bad shape, I couldn't play them very well either.

That's where a good musical instrument technician comes in. These guys are accomplished at setting up all

Items Covered This Month

- Musical instrument repair
- X2 capacitor failures
- Repairing a Tevion PVR
- Panasonic air-conditioner repair

*Dave Thompson runs PC Anytime in Christchurch, NZ.
Website: www.pcanytime.co.nz
Email: dave@pcanytime.co.nz

IN A PREVIOUS LIFE, I PLAYED GUITAR AND BUILT & REPAIRED GEAR USED IN THE MUSIC INDUSTRY

types of instruments and it isn't just mechanical work either. Increasingly, today's instruments are 'electrified', meaning they contain passive or active electronic circuitry that allows them to be amplified for live stage work or when used in a recording studio.

Of course, the downside to this very interesting line of service work is that there are relatively few employment opportunities compared to, say, washing machine repair. If you do want to get into this work, one option is to set up as a self-employed freelancer and take on repairs for all sorts of instruments. Another option is to be the technical 'go-to' guy at a local music emporium. While some of the bigger music stores often have a salesman-cum-technician on their payroll, most non-specialised retail outlets don't. Unfortunately, people usually go to the latter type of store to buy their first guitar or violin and can easily end up with an instrument that's virtually unplayable by even a skilled musician.

Yet another option is to become a road technician. Most big bands travel with a crew of 'roadies' and other staff to enable them to put on a consistent show from one venue to the next and keep the gear in good working order.

One specialist area that obviously requires good technical skills is sound reinforcement, which is just a fancy term for 'music amplification'. In the days of the Beatles, bands played on stage with their individual instrument amplifiers and a basic PA system for the vocals. Given that the most powerful instrument amplifiers around back then pumped out about 60W, it was no wonder nobody could hear the music over the screaming of thousands of teenage fans!

These days, by contrast, skilled servicemen are required to look after the massive amplifiers and speakers that are used to fill theatres and even whole stadiums with sound.

Where's this going?

No doubt you're now wondering where all this is leading. I'm a computer serviceman in my current life but many years ago, my night job involved playing guitar and living the life of a touring musician. And since it was known I was into building effects pedals and even my own guitars, I was often the go-to guy should something go wrong with any of the gear. Sadly, these days, I no longer do many repairs in that line but every now and then I'll get a call from an old mate wanting to get something repaired.

A classic example is a guitar-playing friend of mine who wanted to join a folk-rock act as their mandolin player. He had acquired a mandolin but it turned out to be one of those inexpensive models from the local bargain basement outlet. And being an acoustic instrument, it required modifying in order to add a pick-up to it.

This isn't a problem because many manufacturers have created pick-ups for just about every instrument imaginable, so it's a relatively simple task (though not always an inexpensive one). In this case, I had to drill a couple of discreet holes to mount the various components and route the cables but I wasn't too worried about doing this due to the low-end nature of the instrument. Besides, when this type of work is done properly, you'd never know that the instrument has been modified.

In electro-chemical solutions, we reign

In the formulation, manufacture and supply of conformal coatings, thermal pastes, encapsulants, cleaners and lubricants, we have the solution. Through collaboration and research, we're developing new, environmentally friendly products for many of the world's best known industrial and domestic manufacturers – always to ISO standards.

Combine this unique ability to offer the complete solution with our global presence and you have a more reliable supply chain and a security of scale that ensures you receive an exemplary service.

Isn't it time you discovered how Electrolube can serve you? Simply call, or visit our website.

+61 (0)2 9938 1566
www.electrolube.com

ELECTROLUBE
THE SOLUTIONS PEOPLE

DEPENDING ON THE HABITS OF THE SINGER, CLEANING IT CAN BE QUITE UNPLEASANT...

I had several pick-up style choices for my friend's mandolin, each with its own pros and cons. In the end, due to good user feedback, I went with a bridge-replacement pick-up. This clever device looks like a normal carved wooden mandolin bridge, the only difference being a cable protruding from the bottom. Piezo elements are embedded into the wood and as each string is plucked, these vibrate in sympathy with the string and produce an electrical signal which is then piped off to a preamp/amplifier.

The new bridge simply replaces the existing bridge, though it requires a little fettling here and there to set the string relief and action correctly. I also had to drill a hole to accommodate the 2mm-diameter shielded output cable, which I routed down through the hollow body and soldered to a clever strap-mounting button that came with the kit and doubles as a 6.5mm jack connector.

In practice, it was simply a matter of removing the old body strap mount and then using an existing screw hole as a guide to drill a much larger hole to accept this new connector. While I didn't have to mount the connector there, the back strap mounting point was in line with the centreline of the instrument for optimum balance and ease of playing, so it was the ideal place.

There were a few other choices to make – some versions of the pick-up kit contained an on-board preamp module but I decided against this option because there isn't a lot of room inside mandolins and I didn't want to be chopping this one up too much. Besides, the owner was going to be playing the instrument through a very well-appointed guitar combo amplifier so a preamp wasn't necessary and he could tweak the sound using the amplifier controls to his heart's content.

In the end, the acid test is how it sounds and I have to be honest and say that this particular mandolin wasn't one of the best I'd heard. It played OK and after a bit of fiddling around, we managed get an acceptable sound from it. Even so, after a few months playing live, the owner came back to me inquiring about something better.

He'd found that even after a lot of mucking about with fancy tone equalisers and different amplifiers and effects units, the acoustic feedback he was experiencing at even low volumes was becoming unacceptable. This is an age-old problem when using acoustic instruments in a live environment.

Guitar makers and pick-up manufacturers have strived for years to create the perfect solution for amplifying instruments that aren't 'natively electrified' and have tried everything from stuffing instruments full of polyester to blocking sound holes to using a myriad of different pick-up systems. None really work that well, especially as piezo-style pick-ups rely on picking up vibrations created by the instrument and tamping it down diminishes both the pick-up's output and the sound quality.

The answer in this case was simple but expensive (like many things in the music industry) – I ended up custom-building the guy a solid body mandolin using two purpose-made electric-guitar style pick-ups and this resolved all his problems. This might seem to be a sledge-hammer/walnut approach but there is no comparison between the two instruments and the solid-body simply gave this player a lot more options and the freedom to play the instrument the way he wanted.

Microphone problems

Some time ago, a vocalist I knew had problems with a top-quality professional microphone. Like most singers, she has very specific preferences when it comes to the microphones she uses and she chose one she considered suited her voice the best. She also purchased two of these mics to use in live performances, thereby ensuring that no matter where the band played and what local gear they hired, she would still have her pet microphone.

These professional mics don't come cheap and the brand she chose is one the best and biggest names in the business. However, after a bit of use, one of them started to play up, randomly dropping in and out during performances. It ended up not being used at all and sat gathering dust until one day she asked me if I could take a look at it.

Now anyone who has ever pulled a standard cable-type microphone apart can tell you that there is nothing much inside them to go wrong. All the quality is in the element (or insert) itself and this is usually found under a protective grille cover at the business end of the mic. These covers invariably unscrew and once removed can be (and should be) thoroughly cleaned.

There is also usually some kind of fibre or plastic filter inside the mic cover and depending on the habits of the singer, cleaning it can be quite an unpleasant job. However, it's a task that should be done regularly to ensure optimum performance.

The cover is basically all that protects the sensitive insert and most mics end up with the odd dent in the dome because they have been dropped or otherwise abused. The insert itself

Servicing Stories Wanted

Do you have any good servicing stories that you would like to share in The Serviceman column in SILICON CHIP? If so, why not send those stories in to us? In doesn't matter what the story is about as long as it's in some way related to the electronics or electrical industries, to computers or even to car electronics.

We pay for all contributions published but please note that your material must be original. Send your contribution by email to: editor@siliconchip.com.au

Please be sure to include your full name and address details.

THE BATTERY ANALYSER SPECIALISTS

The battery experts at Master Instruments are the first port of call for anyone looking into battery analysis or battery fleet maintenance systems and equipment.

Our expert team can tailor packages to suit your specific needs to ensure your rapid return on investment outcomes are achieved & exceeded.

CADEX

The Cadex C7000 Series 2 & 4 channel battery analysers offers a platform that fulfills virtually all battery testing and conditioning needs. Suitable for most battery chemistries including NiCd, NiMH, Li-Ion, Lithium Phosphate, Lithium Polymer, Lead acid and more.

Connectivity is achievable via more than 1,500 custom SnapLock™ Battery Adapters or alternatively there exists neatly designed universal adaptors such as the Smart Cable, Flex-Arm & Rigid-Arm allowing for quick and easy setup saving valuable time

The units can be used stand-alone, or with the optional BatteryShop™ software to capture test data and view graphical real-time results on your PC monitor.

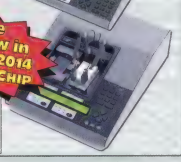

See Review in March 2014 Silicon Chip

18 Automated Programs support all battery needs

BASIC Auto | Charge | Prime | Quicksort

ADVANCED Self Discharge | Life Cycle | Discharge Only | Extended Prime | Ohm test Run time | Boost | Quicktest | Q-Learn | Learn

CUSTOM 4 Custom programs - Charge | Discharge | Recondition | Wait & repeat

	Battery Voltage Range	Charge/Discharge current (per station)	Max Charge Power (per station)	Max Discharge Power (per station)
C7200 (40 watts)	1.2V to 15.0V	up to 4.0A	40 watts	35 watts
C7400 (80 watts)	1.2V to 15.0V	up to 4.0A	55 watts	35 watts
C740ER (170 watts)	1.2V to 36.0V$_{Extn}$	up to 6.0A	75 watts	75 watts

VENCON

Vencon Ultimate Battery Analyser UBA5 is a professional grade, very versatile, PC controlled, dual channel, battery analyser, charger and data logger with networking capability.

UBA5 enables you to virtually analyse any kind of batteries with any kind of battery chemistries. Be it small button cells, big batteries; Alkaline battery chemistry, NiMH rechargeable batteries (both standard and LSD), NiCd rechargeable batteries to Li-Ion & Li-polymer batteries; anything as long as it falls under the acceptable power, voltage and current range.

The Visual Battery Analysis Routine (BAR) designer is one of the strong points of the UBA5 and allows the user to custom build battery analysis routines, providing endless possibilities.

	Max No. of cells (in series) that can be charged	Nominal Battery Pack Voltage
NiCd / NiMH	25 cells	30.0V
Lead Acid / Gel cells	17 cells	34.0V
Li-Ion / Li-Ion Polymer	10 cells	37.0V

The UBA5 tests all battery chemistries from single cells up to 37V packs, and from 20mAh to over 120Ah in capacity.

If maximising the performance of your battery fleet is important to you, speak to one of our battery experts about the Cadex or Vencon battery analysers today!

Master Instruments Pty Ltd

Sydney: (02) 9519 1200 Melbourne: (03) 9872 6422
Perth: (08) 9302 5444 Brisbane: (07) 5546 1676

EMAIL: sales@master-instruments.com.au WEB: www.master-instruments.com.au

FIRST CAB OFF THE RANK WAS A 1µF X2 CAPACITOR

is a module containing a diaphragm and voice coil arrangement, similar to a tiny speaker but wired to work in reverse. Speaking into it vibrates the diaphragm and the voice coil generates a minuscule current which is then piped off and amplified in the usual way.

So there's not much in there to go wrong! If the insert is faulty, replacement is about all that can be done to get things going again.

In this case, I looked for dodgy solder connections and soon found a suspicious-looking joint; one of the wires connecting the insert to the built-in XLR connector (sometimes called a Canon connector) was actually green, indicating that some kind of corrosion was taking place. This was an easy fix but to be safe, as well as cleaning the whole thing from top to bottom, I also cut, stripped and re-terminated every connection I could find. It was then reassembled and returned to my friend who tried it and found that the fault had gone. As far as I know, it's still in-use today.

Valve guitar amplifier

These days, anyone dealing with guitar amplifiers has to be able to cope with everything from old-style (but much loved) valve technology right through to programmable digital modelling amplifiers. Much of the latest hardware is very sought-after but the circuit details (and software) are often 'commercially sensitive', so circuit diagrams are all but impossible to come by. As a result, repairs are often carried out using educated guesswork and real-world experience.

Spare parts are also an issue. If they are available at all, it will typically be only from impenetrable dealer networks at inflated prices. Because of this, a lot of service work tends to be done the old-fashioned way, using resourcefulness and creative thinking.

I was recently asked by a client to take a look at a faulty guitar amplifier. The owner reported noise randomly coming from the speaker and while I mischievously suggested it might have simply been some of the modern music he played(!), he was adamant it wasn't.

I set the amplifier up on the bench and fed a signal from an MP3 player into one of the line inputs so I could check it out. This unit is a so-called "modelling amplifier". It stores the tonal and effects settings of many classic amplifiers and guitar sounds and these can be selected with the push of a button.

With the music playing, I selected a few presets and listened in while I tackled another job. Sure enough, after 10 minutes or so, some nasty digital-sounding noise (almost like someone screaming) broke through the music. Unfortunately though, due to the hugely complex nature of the circuitry inside, there was no way I could do anything more than look it over for dodgy solder joints and loose connections.

Nothing obvious was found, so I then did what any other serviceman would do and hit the internet. I couldn't find anybody reporting the same problem but I did discover that the firmware for this amplifier had been superseded by a couple of revisions, so I downloaded and updated everything using the built-in SD card reader. After restarting the amplifier, I then fed music from my MP3 player through it for the rest of the day without problems.

So it could have been a firmware glitch or maybe I re-seated something important while I was checking out the circuit. There's no way of knowing but either way, I'll take it as fixed.

X2 capacitor failures

B. C., of Moss Vale, NSW recently tackled two items of equipment in which X2 capacitors had failed, the first involving a Monza Water Tank Rain Brain pump control. Here's what happened . . .

Our new home has a storm-water tank that provides rainwater for toilets, the garden and the laundry. When a tap is turned on, the Rain Brain senses if water is in the tank and if so, uses this as the supply. If not, it passes town water through instead.

After four years of use, the control unit suddenly ceased working. Upon investigation, the green power LED appeared very dim so I decided to delve in further and see if I could fix the problem.

Removing the unit from the pump assembly was a relatively simple matter and I was then able to take a look at the control PCB. No obvious burnt out or discoloured components were present, so I decided that the mains voltage section was the first place to check.

First cab off the rank was a 1µF X2 capacitor which drops the mains voltage down to the low voltage required for the control circuitry. This was removed, measured and found to be nearly half its nominal value. A 1µF X2 capacitor wasn't locally available but an eBay search for a replacement came up trumps. This was subsequently installed and the unit was soon successfully "Rain Braining" again.

The second item involved a Ringgrip Model RETP electronic appliance timer. It had been operating normally but then the LCD display suddenly began showing all segments at once, making it impossible to read. In addition, it was no longer following the set programming which meant that the device was effectively inoperative.

I unplugged it from the mains and after about 10 seconds, the display became readable again. It was then possible to set the time and program it in the normal manner, which suggested that the on-board back-up battery was OK. However, as soon as it was reconnected to the mains, the display became unreadable again, and the test programming no longer operated. Unplugging it from the mains then made the display readable again.

The unit was subsequently disassembled by removing two screws and I began tracing out the circuit. This revealed a 100Ω resistor in series with a 0.33µF X2 capacitor and a parallel 150kΩ resistor. This in turn fed a bridge rectifier, followed by a 100µF electrolytic capacitor and a 27V shunt

zener. A few quick measurements showed that the low-voltage side was sitting at 27V, which is normal.

As a precaution, I removed the X2 capacitor to check its value and found it had two small blackened spots between its leads. It was also nearly half its nominal value but replacing it with a new one did not fix the problem with the display.

It was time to take a closer look to find the real problem. With the unit unplugged, I checked the on-board back-up battery and found that it measured 1.2-1.3V. This seemingly indicated that it was OK, especially as the display was readable. However, when the unit was plugged into mains, the battery voltage shot up to nearly 3.5V – not good for the LCD which is designed to operate at around 1.2V.

In the end, I concluded that the battery had in fact reached the end of its life, since it was unable to maintain its terminal voltage. And that was it – replacing the battery fixed all the problems and the display then operated normally when the unit was plugged into the mains.

It looks like the original on-board back-up battery failed simply because of age. And that quite possibly caused the X2 capacitor to partially fail due to the stress placed on it by the extra current drawn by the faulty battery and the display circuitry. Alternatively, it's possible that the X2 capacitor failure was also age related.

So X2 capacitors do tend to fail and lose value after some years of use. Is this normal aging behaviour for this type of component or was it just a component quality issue?

Editor's comment: with regard to the failure mode of X2 capacitors, it is possible that gradual loss of capacitance is directly related to the fact that high transient voltages can "punch through" the capacitor's dielectric film. The resultant heavy discharge then burns away the metallisation in the region of the short circuit, leaving the capacitor still able to function but with slightly reduced capacitance.

It does appear that gradual loss of capacitance in X2 capacitors is fairly common and this suggests that "punch through" is a frequent occurrence. X2 capacitors are supposed to be able to withstand transient voltages up to 1.2kV. So this gradual loss of capacitance suggests that some X2 capacitors simply don't have sufficient voltage blocking capability.

Panasonic air-conditioner

SILICON CHIP staff member Nicholas Vinen knows a bit about electronics so what did he do when his Panasonic split-system airconditioner failed during Sydney's hot summer weather? He fixed it, of course, with a little help from an air-con specialist! Here's what happened in his own words . . .

I have had this system for about 10 years now and it really helps to make Sydney's humid summer days more bearable. Like virtually all split systems, it's controlled by an infrared remote that lets you set the mode (cool, heat or dry), temperature, fan speed, louvre swing and so on.

About a year ago, the unit started playing up in that it would sometimes not respond to commands from the remote. It then started working normally again for some time, so I dismissed the problem as being due either to interference or a low battery. And then, suddenly, it happened again and then again a couple of weeks later.

After a while, it only worked for a few hours a day, then for less than an

Serviceman's Log – *continued*

Tevion PVR: puzzling fault symptoms but an easy repair

Faulty electrolytic capacitors have caused problems in all sorts of devices over the years. For regular contributor B. P. of Dundathu, Qld, tracking them down in his Tevion PVR proved a walk in the park. Here's his story . . .

After several years of reliable service, our Tevion PVR suddenly started to malfunction. At first, it exhibited a very peculiar problem. Whenever the channel was changed to ABC2, the picture went to monochrome and would stay that way, even after changing back to another channel. In fact, the only way to correct this was to select a channel other than ABC2, then switch the unit off and back on again. It would then revert to colour with no further problems, unless it was changed back to ABC2.

This fault persisted for some time but was initially tolerated as ABC2 was only watched occasionally. However, the unit then started to sometimes freeze when playing back a recorded program. This condition slowly worsened until it got to the point where it was impossible to play back any recorded program. Live television could still be watched with no issues though, other than ABC2 being displayed in monochrome (and then the other channels coming up in monochrome) whenever it was selected.

At this stage, a new Phoenix PVR was purchased and the Tevion unit set aside. Eventually though, it got the better of me and I decided to see if it could be repaired.

The lid was easily removed by undoing five screws and as soon as I lifted it clear, I could see what the problem was. Electrolytic capacitors C140 (1000µF 16V), C143 and C144 (both 1000µF 25V) all had severely bulging tops, a sure sign that they had failed.

Next, I removed the combined power/tuner board. This is secured by three screws to the bottom of the case and two more screws between the antenna connections at the back of the case, so this step was easy. I then removed the faulty capacitors and replaced them with known good ones that I'd previously salvaged from a defunct piece of equipment. They had tested 'good' on my ESR meter and salvaging them from non-repairable gear saves buying new parts.

At the same time, I also removed and tested the other electrolytic capacitors on the PCB and I found that C115 (22µF 50V) had quite a high ESR. This too was replaced with a recycled component that tested 'good' on my ESR meter.

Once all the capacitors had been fitted, I re-assembled the PVR and set about testing it to see if the problems had been fixed. First, I tested the unit on off-air signals and found that all channels, including ABC2, were now in colour, so that issue had been fixed. I then tried playing back a recorded program and I found that this too worked with no issues.

My final test was to record a program and then play it back. This also proved to be successful, so the PVR is now back in perfect working order.

However, I still find the fault symptoms displayed by the unit to be rather puzzling. I can understand why the faulty electrolytic capacitors caused an issue with the playback of recorded programs, this being due to the extra power required to operate the hard drive. What I don't understand is why they caused ABC2 to change to monochrome and the rest of the channels to then follow suit, until the unit was switched off and back on again. I guess I'll never know but at least the unit is now back in working order again.

hour at a time, then only for a few minutes at a time. The airconditioner itself continued to operate; I just couldn't control it when it was in one of its 'states'. Eventually, I was relegated to using the switch on the unit itself, under the hinged cover, to turn it on and off but I had no way to change the temperature or other settings.

Given the age of the unit, I was worried that replacement parts would not be available but eventually, after a bout of very humid weather, I relented and called an air-con service company. The serviceman they sent out was very helpful and quickly got the cover off the unit after removing three hidden screws plus one under the lid.

The infrared receiver is mounted on a small PCB at the lower-right of the unit, along with some indicator LEDs, and this was connected to the control board via a ribbon cable terminated with a header plug. The serviceman removed this remote board and we both took a good look at it. It's a pretty simple affair, with a 3-pin IR receiver unit (power, ground and signal output). I could identify which pin was power as this was connected to the anodes of the LEDs, while the ground pin was similarly obvious as it connected to the receiver's metal shield. So, by a simple process of elimination, the remaining pin was the signal output.

On closer inspection, we spotted a fair bit of copper corrosion, despite the fact that the board was covered in a solder-mask film. It was especially bad around the ground connections of the IR receiver. In addition, the receiver's power supply track looked like it had been eaten away where it left the much larger copper area connecting the LED anodes.

Clearly, because the IR receiver is the only part of this board that is constantly powered, moisture from the condenser had caused electrolytic corrosion in the IR receiver's power circuits. And because the positive supply track is much thinner than the ground copper, it had failed first.

I soldered a thin insulated wire from the IR receiver power pin to the nearest LED anode and the serviceman plugged the board back in. And voila, it all worked again!

It was just as well it did because while I had been fixing the board, the serviceman had called his office and found out that parts for this unit are no longer available. Fortunately, my trusty air-con unit now works properly again, without the cost and hassle of installing a new one. SC

2014 Catalogue OUT NOW!

Prices valid until 23/04/2014

Car Event Recorder with GPS

Includes both front facing camera with a 2.7" LCD playback screen, and a second camera to record from the rear of the vehicle. The camera has a 95° wide-angle view lens, ensuring that incidents on the road are captured.

- G-Sensor to monitor vehicle movement
- Ignition start feature for the Automatic Recording function
- 12VDC

QV-3844

$229.00

NEW

WE HAVE MOVED

48 Mercer Street
Geelong, VIC, 3220

Parking available

PH: (03) 5221 5800

Ultimate Rear-View System

Suitable for 4WD's, trucks, RV's and larger vehicles. Wide viewing angle, IP65 camera with 18 infrared LEDs for clear day/night vision.

- 7" LED display with two video inputs
- 12V or 24V operation
- IP65 rated

QM-3742

$199.00

"Burp" Battery Charger Kit for Ni-Cd & Ni-MH

Ref: Silicon Chip Magazine Mar 2014

Charge one single cell or up to 15 in series connected cells (i.e. up to 18V). Fast charge, top-up, trickle and "burp" charge options.

- Adjustable charging time-out
- Adjustable dT/dt (Temperature change rate cut-off)
- Adjustable charge current

Kit supplied with double sided, solder-masked and screen-printed PCB, die-cast case (119 x 94 x 340mm), label and electronic components. Requires a power supply.

KC-5527

$79.95

NEW

Jaycar Electronics
Better, More Technical

StepDuino Arduino Compatible

A self-contained board with onboard stepper motor drivers, servo interface, microSD card slot, and 20x4 character LCD. Perfect for building robots or other mechatronics projects: just connect up stepper motors and go!

- 2 x 4-wire stepper motor controllers
- 1 x servo interface
- Serial communications header
- Compatible with the Arduino IDE
- Size: 113(W) x 74(H) x 25(D)mm

XC-4249

$149.00

NEW

4D Systems Intelligent Module with Touch for Arduino

This pack allows for quick connection to existing Arduino projects to design and build. Includes a 3.2" LCD colour display with resistive touch and multiple input/outputs, a 4D Arduino shield and 5 way interface cable.

XC-4280

$119.00

NEW

Pan/Tilt DIY Wi-Fi IP Camera - 720p

Produces bright and sharp vision for you to survey the home or office remotely. Capture images or video to microSD card (available separately) when motion or sound is detected as well as send an email. Power supply included.

- Two way audio
- 10 x IR LEDs, night visibility up to 15m
- Pan/Tilt Angle: 320° Pan, 120°
- Size: 100(L) x 100(W) x 125(H)mm

QC-3839

$199.00

NEW

Powerboards with USB Ports

Feature 2 x handy USB ports for charging or powering your Smartphone, USB gadgets, etc. Overload protection.

3 Way MS-4070 $19.95
4 Way MS-4072 $22.95

FROM $19.95

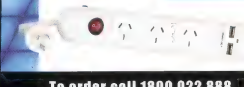

170 Lumen Torch with Adjustable Beam

Features a robust machined aluminium body, pull-zoom adjustable beam, and O-ring seal for dust and water resistance. Includes wrist strap and 1 x AA battery required.

- Equipped with CREE® XPE LED
- Up to 4 hours burn time

ST-3483

$9.95

NEW

550 Lumen Head Torch with Adjustable Beam

Light up your way when hiking, camping, caving, or working on your car or boat.

- Equipped with CREE® XML LED
- Adjustable headstrap and light beam
- Up to 5 hours burn time

ST-3298

$29.95

Also available:
Rechargeable version ST-3299 $49.95

NEW

Hardcore

Jaycar Electronics
Better. More Technical

IP67 True RMS DMM with Smartphone App

View live measurements, trend graphs, data log, email your results and upload them to the Cloud - all from your Smartphone!

- CAT IV 600V
- AC/DC voltages up to 1000V
- AC/DC current up to 10A
- Resistance, capacitance, frequency and more
- IP67 waterproof
- Bluetooth® Smartphone/PC interface
- Data log storage

QM-1576

$219.00

Professional Digital Light Meter

NEW

Extremely accurate with a rapid response and can store min and max values for easy comparisons. Measurement can be switched between LUX and FC (foot candles) and a data hold function is included for pausing the reading.

- Max 400K LUX

QM-1584

$129.00

Soldering Equipment

80W GOOT 240V Soldering Pencil

This soldering iron offers exceptional heat recovery. With its high insulation and low current leakage, soldering of precision flat ICs and CMOS is a breeze.

- Tip temperature is set at 320˚C
- Ribbed rubber handle for superior grip

TS-1430

$79.95

Lead-Free Solder

99.3% tin, 0.7% copper lead-free. Sizes for every application from hobby to industry.

0.71mm
- 200g Roll

NS-3088 $17.95

1mm
- 200g Roll

NS-3094 $17.95

$17.95 EACH

Electric Screwdriver Kit

Powerful high torque electric driver with massive 102-piece stainless steel bits set, all packed into a tough aluminium carry case.

TD-2491

$39.95

Electric Drill

Suits a variety of tasks around the house or on the job. Features a forward/reverse switch, lock setting, and moulded plastic grip. Keyless chuck 10mm.

- 350W
- Mains powered
- Cable length: 1.8m
- Size: 250(L) x 190(H) x 65(D)mm

TD-2493

$19.95

Metal Desolder Tool

Quality desolder tool made from lightweight metal and has strong suction.

- Constant vacuum force
- Automatically cleans itself with each action
- Total length including tip - 195mm

TH-1862

$16.95

Deluxe Soldering Iron Stand

Ideal for heavier soldering irons. Features a hefty cast iron base with removable sponge tray and twin spiral iron holder.

TS-1507

$16.95

Spare sponge available separately TS-1508 $3.95

Stainless Steel Mixed Bit Set

A collection of commonly used driver bits in a handy rubber edged case. All stainless steel. Driver not included. See website for contents.

- 18 piece
- Case size: 115(L) x 50(W) x 31(D)mm

TD-2111 **WAS $29.95**

SAVE $10

$19.95

Anderson 50A High Current Connectors

These connectors are used in many 4WD, boating, and other automotive applications. Supplied as a moulded 2 pole with contacts.

- 600V Rated (AC or DC)

6AWG	PT-4420		$9.95
8AWG	PT-4425	NEW	$9.95
12-10AWG	PT-4427	NEW	$9.95

$9.95 EACH

Right Angle IEC Adaptors

For installations where wall space or rack space is extremely limited. Both units feature strain relief rubber cable entries.

- Rated at 250V, 10A

IEC320 C13 Right Angle Line Plug PP-4012 $7.95
IEC320 C14 Right Angle Line Socket PS-4015 $7.95

NEW

$7.95 EACH

What is Qi?

NEW

Qi, is a new standard for inductive electrical power transfer over distances of up to 4mm. Not all Smartphones support this standard however we stock compatible cases/pads that will allow wireless charging on some of the most popular smartphone models.

Qi Wireless Charging Pad

Charge your Smartphone wirelessly. Just sit your phone on Qi compatible device on top and it will start charging.

- Charging voltage: 5VDC

MB-3658

We have suitable Qi charging accessories for the iPhone® 5, Samsung Galaxy® S3 and S4 which will allow wireless charging on this pad.

$49.95

Qi Wireless Charging Case for iPhone®5

The phone slides perfectly into the case and docks with the connector inside allowing power transfer.

- Input voltage: 5VDC 1A

MB-3662

$39.95

NOTE: Doesn't suit iPhone® 5S and 5C

Qi Wireless Charging Pad for Samsung S3 & S4

Adhesive pads for the Samsung Galaxy® S3 and S4 that allow these phones to be wirelessly charged with a Qi compatible charger.

- Input voltage: 5VDC 1A

Samsung S3 MB-3664 $24.95
Samsung S4 MB-3665 $24.95

$24.95 EACH

To order call 1800 022 888

www.jaycar.com.au

Savings off original RRP. Limited stock on sale items

2 Core Cables

Double insulated 2 core tinned power cable suitable for automotive and marine applications.

7.5 Amp Tinned
WH-3057

$1.20 Per metre

15 Amp Tinned
WH-3079

$2.60 Per metre

56 Amp Tinned
WH-3063

$7.00 Per metre

*Also available in bulk on rolls

Component Storage

28 Compartment Storage Case

This see through plastic storage box has removable partitions allowing the box arrangement to be customised to suit your needs.

- 2 snap action latches secure the hinged lid
- Size: 357(W) x 48(H) x 220(D)mm

HB-6313

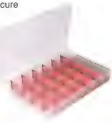

$11.95

30 Drawer Parts Cabinet

6 rows of 5 drawers, each one measuring 50(W) x 30(H) x 115(D)mm. Ideal for workshop use and can be wall mounted.

- Stack multiple units together for larger storage requirements
- Size: 280(W) x 210(H) x 130(D)mm

HB-6323

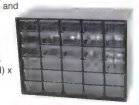

Also available:
33 Drawer Parts Cabinet
HB-6328 $23.95

$22.95

IP67 Rated Illuminated Pushbutton Switches

IP67 rated for industrial use or other harsh environments. Illuminated, DPDT NO/NC, DPDT, on-off or momentary action. Rated for 250VAC@3A, with 12VDC LED illumination. Mounting hole 16mm.

Red	**SP-0791**	**$14.95**
Green	**SP-0792**	**$14.95**
Blue	**SP-0793**	**$14.95**
Momentary - Red	**SP-0796**	**$12.50**
Momentary - Green	**SP-0797**	**$12.50**

FROM $12.50

"SPEAKON" Loudspeaker Connectors

Heavy duty, fail-safe sp... connects.

- Locking ring
- The stand...
- PS-109...
- Solderless termination
- ...nections

NEUTRIK

Round Speaker Bin Chassis Mount Plastic
PS-1094

$11.95

Square Chassis ...ount Plastic
...092

$11.95

...ndard for PA and sound ...ady-made cable

FROM ...4.95

WWW.JAYCAR.COM.AU
Savings off original RRP. Limited stock on sale items.
$19.95 from
$19.95 $19.95 $19.95 $19.95 $19.95
PS-1182 PS-1184 PS-1186
10cm 12cm 15cm
Speakon Connectors
Speakon Chassis Mount Plugs
Speakon Inline Plugs
Speakon Panel Mount Plugs
Speakon Chassis Mount Sockets
Speakon Inline Sockets
Speakon Panel Mount Sockets
Speakon Connectors
Speakon Cable
Speakon Cable
Speakon Cable

Camping Ideas

Jaycar Electronics
Better. More. Technical.

80 Channel UHF CB Radios

Mini transceivers to keep in touch when camping. Feature electronic volume control, monitor functions and an integrated blue LED torch.

NEW

- 3km range (0.5W)
- Requires 3 x AAA batteries per unit
- Size: 55(W) x 110(H) x 35(D)mm

DC-1017

Sold as a pair

$39.95 PAIR

Rechargeable Head and Bike Torch Kit

Can be mounted on head or suitable handlebars for outdoor activities, Includes headstrap and 2 (small and large) flexible rubber mounts for handlebar mount.

- Size: 54mm(L) x 42mm(Dia)

ST-3467

$89.00

NEW

600 Lumen LED Lantern

Cool white CREE® XML LED. Adjustable light modes and intensity. Waterproof and durable.

ST-3137

NEW

$34.95

100 Lumen Solar Charged Multi-Purpose LED Lamp

The lamp doubles as a lantern or a pendant light. Convert the handle to a stand and use as a desk lamp. Charge the battery by connecting your lamp to the supplied solar panel.

- 100 lumens

SL-2701

$29.95

Ultra Bright IP67 LED Flexible Strip Light

Fully waterproof, flexible LED strip light that is perfect for any outdoor application needing some bright, reliable lighting.

- 12VDC
- Warm white colour
- 720 lumens
- Size: 1000(L) x 10(W)mm

ZD-0578

$49.95

NEW

Portable Ceiling Fan and Light

Simply hang it where airflow is needed. Features soft foam blades for safety, two fan speeds, and in-buiit LED downlight.

- Requires 4 x D batteries
- Size: 220(Dia.) x 145(H)mm

YS-2804

$34.95

Portable Mains Power

Take your creature comforts with you when you're out and about this summer. These modified Sine Wave inverters produce 230VAC from your vehicle's battery with sufficient power to run anything from a battery charger to power tools.

150W	MI-5102	WAS $49.95	NOW $44.95	SAVE $5
300W	MI-5104	WAS $69.95	NOW $62.95	SAVE $7
400W	MI-5106	WAS $89.00	NOW $80.00	SAVE $9
600W	MI-5108	WAS $149.00	NOW $134.00	SAVE $15
800W	MI-5110	WAS $189.00	NOW $170.00	SAVE $19
1000W	MI-5112	WAS $249.00	NOW $224.00	SAVE $25
1500W	MI-5114	WAS $399.00	NOW $359.00	SAVE $40

Pure Sine Wave inverters also available. See in-store or on website.

FROM $44.95

Recreational Solar Panel Package

Clean renewable energy wherever you go. Convert your 4WD or caravan to generate sufficient solar power to operate several appliances - 12V camping essentials and luxuries etc. Just add a battery for a self-sustained setup.

$260.00

- 1 x 80W monocrystalline solar panel
- 1 x 12V 6A charge controller
- 2 x female PV connector
- 2 x male PV connector

ZM-9300 **WAS $280**

SAVE $20

Caravan Essentials

Solar Powered Ventilator

Completely solar powered to reduce mould, mildew, moisture and excess heat build-up in boats, caravans and RVs.

- Wall or roof mounting
- Stainless shroud
- Gasket included
- Size: 215(Dia.) x 30(H)mm

MP-4559

$79.95

12VDC Touch Switch Controller With 3 x Touch Switches

Add up to three sleek and unobtrusive touch switches to control 12VDC LED lighting in your caravan, car, or boat. Each switch controls the same device.

- 3A rated
- 6W standby
- Size: 59(L) x 39(W) x 13(H)mm
- Touch switch wire length:150(L)mm

ST-3942

$29.95

Also available: 12VDC Switch Controller with PIR Sensor ST-3940 $19.95

Double GPO with 2-Pole Switches for Caravans & Motorhomes

By law, caravans, motorhomes and other recreational vehicles require a GPO with double pole switch that disconnects both the Active and Neutral to reduce the chance of electric shock.

NEW

- 240V 10A rated
- Includes mounting screws
- Safety approval number: V110160

PS-4069

$19.95

Portable RCD with 15A to 10A Mains Plug Conversion

Convert your 15A caravan power lead to fit a 10A power outlet. Features a 10A circuit breaker/RCD in case you accidentally overload the device. Ideal for overnight park on a property that does not have a 15A power outlet.

- Voltage: 240VAC, 50Hz
- Size: 180(H) x 135(D) x 124(W)mm

MS-4044

$79.95

Heavy Duty 15A Caravan Extension Leads

Heavy duty mains extensions leads with and sockets, and a thick orange 15A socket end also feat indicate that powe caravans a

2.4GHz Wireless Reversing Camera with DVR

NEW

An easy to install wireless camera kit for cars which consists of an LCD playback monitor, an event recording camera on the back of the screen, as well as a reversing camera for the rear of your car.

- LCD: 4.3"
- Power: 8-15VDC
- Range: Up to 50m
- Memory: Requires microSD card up to 32GB
- Infrared LEDs for nightvision

QM-3850

$229.00

1080p Mini Car Event Recorder with IR LEDS

Compact Car Event Recorder with a 1.4" LCD screen, capable of recording in full HD. Record's on to a microSD card (not included) and supports up to 32GB of capacity. Features a sensitivity adjustable G-Force sensor for automatic incident file separation recording. Mounts to your dashboard or windscreen with the supplied bracket and suction cup.

- Built-in microphone
- Ignition start recording
- Movement detection recording

QV-3846

NEW

$79.95

Bluetooth® Hands Free Car Kit with LCD

Safely dial or answer phone calls hands-free whilst driving with this user friendly visor mounted Bluetooth® car kit.

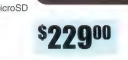

- Large LCD display
- Voice operated dialing
- Allows 2 phones to connect simultaneously

AR-3122

$49.95

In-Car FM Transmitter for iPhone® /iPod®/iPad® with Charger

Simply connect the transmitter to your iPhone®, iPod® or iPad® select a frequency from 88.1 to 107.9MHz then tune in using your FM car radio. It also has a built-in mic for hands-free communication and a USB port built into the cigarette lighter plug for charging other popular electronic devices.

- Working voltage: 5VDC
- LCD display
- Size: 100(L) x 30(W) x 12(D)mm

AR-3124

$29.95

Handsfree AUX Mic Lead for Smartphones

Play your Smartphone's music collection on your car radio and take calls hands-free by pressing the answer button.

- 1.2m stereo audio lead

AA-2097

$9.95

6-in-1 Jump Starter Power Station

An inverter, jump starter, work light, air compressor, USB and battery charger. Digital readouts. 400W inverter for emergency mains power.

MB-3694

$169.00

High Quality Audio for Your Boat

Marine AM/FM Radio with MP3 Player

Perfect for your boat with a blue backlit LCD. USB front panel. SD card sockets. 3.5mm AUX socket for connecting an MP3 player or Smartphone. Includes remote.

- Rust-resistant chassis
- UV-resistant faceplate and trim ring

QM-3815

NEW

$89.95

COMBO DEAL #1

Marine Radio & 5" Speakers

QM-3816 **$99**

Valued at $124.90

Marine Coaxial Speakers

Provides excellent audio quality in your boat. High salt and UV resistant. Splash proof.

- Sold as a pair

5" CS-2410 **$34.95 per pair**

6.5" CS-2412 **$44.95 per pair**

FROM $34.95 PAIR

COMBO DEAL #2

Marine Radio & 6.5" Speakers

QM-3817 **$109**

Valued at $134.90

12V 10A Intelligent Switchmode 5 Stage Battery Charger

Charge and maintain 12V batteries with this microprocessor controlled charger. Features reverse polarity protection, overheat protection, voltage compensation, fan cooling and more. 5 stage charging (soft start, bulk charging, absorption, float and pulse).

- Suits WET/Flooded, GEL, AGM, MF, VRLA, Calcium type lead acid rechargeable batteries
- Size: 230(H) x 170(W) x 140(D)mm

MB-3625

$99.95

80 Channel 3W Waterproof Floating UHF Transceiver

A robust floating transceiver suitable for professional or recreational use. The unit can be submersed up to 1m in water. Includes a rechargeable Li-ion battery with a charging cradle and power supply.

- IP67 rated
- Up to 5km range
- CTCSS function
- Hi/Lo power output
- Backlit LCD
- Roger tone

DC-1074

$119.00

Waterproof 1450 Lumen LED Lights

NEW

Each light will blast out 1450 Lumens of white light. Die cast aluminium alloy with tough polycarbonate lens refractors. Stainless steel mounting brackets included.

- 27W
- IP68 Waterproof rating
- 50,000 hour life

Flood
- 125m beam distance

SL-3936 $99.00 per pair

Spot
- 230m beam distance

SL-3934 $99.00 per pair

$99.00 pair

1000 Lumen Rechargeable Torch

CREE® XML LED. Waterproof (up to 20m). Multiple light modes. Great for scuba diving, shell fishing etc.

ST-3489

$99.00

NEW

Arduino

Jaycar Electronics — Better, More Technical

Real-Time Clock Module for Arduino

Perfect for clock projects, dataloggers or anything that needs to know the date and time. Keeps accurate time for years using a tiny coin-cell, and is very simple to connect to your Arduino project.

- Battery included

XC-4272

$29.95

8 Channel Relay Driver Shield

Drive up to 8 relays from an Arduino using just 2 I/O pins. Perfect for home automation projects when combined with relay SY-4052 (available separately $8.95) and DIN-rail relay mounting base SY-4063 (available separately $4.95).

- LED status displays

XC-4276

Also available:
4 Channel Relay Driver Module for Arduino XC-4278 $13.95

$34.95

Arduino Experimenter's Kit

Servo motor, lights, buttons, switches, sound, sensors, breadboard, wires and more are included with a Freetronics Eleven Arduino compatible board in this extensive hobby experimenter and starter kit.

- Comprehensive instructions included
- No soldering required

XC-4262

$89.95

Compatible Boards

Eleven

The "Eleven" is just like an Arduino Uno - but better! It's a microcontroller board based on the ATmega328 with 14 digital input/output pins (of which 6 can be used as PWM outputs), 6 analogue inputs, a 16MHz crystal oscillator, a USB connection, a power jack, an ICSP header, and a reset button.

XC-4210

$39.95

EtherTen

Includes onboard Ethernet, a USB-serial converter, a microSD card slot for storing gigabytes of web server content or data, and even Power-over-Ethernet support.

- ATmega328P MCU running at 16MHz
- 10/100base-T Ethernet built-in

XC-4216

$69.95

EtherMega

The ultimate network-connected Arduino-compatible board: combining an ATmega2560 MCU, onboard Ethernet, a USB-serial converter, a microSD card slot for storing gigabytes of web server content or data, power-over Ethernet support, and even an onboard switchmode voltage regulator so it can run on up to 28VDC without overheating.

- 10/100base-T Ethernet built-in
- 54 digital I/O lines
- 16 analogue inputs

XC-4256

Also available: Mega Prototyping Shield to suit XC-4257 $17.95

$119.00

WE ARE MOVING

Newcastle
Unit 1,
585 Maitland Rd,
Mayfield West,
NSW 2300

PH: (02) 4965 3799

128x128 Pixel OLED Display Module

High resolution, full colour OLED display module! Perfect for graphics, gauges, graphs, even make your own video game or interactive display.

- 16,384 full colour RGB pixels in a 128 x 128 format
- Active display area 28.8 x 26.8mm, (1.5" diagonal)

XC-4270

$49.95

RGB LED Cube Kit 4 x 4 x 4 for Arduino

This stunning 3D-matrix of 64 RGB LEDs incorporates an onboard Arduino-compatible controller so you can produce mesmerising light shows controlled by software. Use it as a mood light or create your own "ambient device" that gently notifies you of new email or instant messages. Some assembly required.

- 4 x 4 x 4 matrix of individually addressable 8mm RGB LEDs
- Size: 106(W) x 130(H) x 106(D)mm (assembled)

XC-4274

$89.95

YOUR LOCAL JAYCAR STORE - Free Call Orders: 1800 022 888

• AUSTRALIAN CAPITAL TERRITORY

Belconnen	Ph (02) 6253 5700
Fyshwick	Ph (02) 6239 1801

• NEW SOUTH WALES

Albury	Ph (02) 6021 6788
Alexandria	Ph (02) 9699 4699
Bankstown	Ph (02) 9709 2822
Blacktown	Ph (02) 9678 9669
Bondi Junction	Ph (02) 9369 3899
Brookvale	Ph (02) 9905 4130
Campbelltown	Ph (02) 4625 0775
Castle Hill	Ph (02) 9634 4470
Coffs Harbour	Ph (02) 6651 5238
Croydon	Ph (02) 9799 0402
Erina	Ph (02) 4365 3433
Gore Hill	Ph (02) 9439 4799
Hornsby	Ph (02) 9476 6221
Liverpool	Ph (02) 9821 3100
Maitland	Ph (02) 4934 4911
Newcastle (MOVING)	Ph (02) 4965 3799
Penrith	Ph (02) 4721 8337
Port Macquarie	Ph (02) 6581 4476
Rydalmere	Ph (02) 8832 3120
Sydney City	Ph (02) 9267 1614
Taren Point	Ph (02) 9531 7033
Tuggerah	Ph (02) 4353 5016
Tweed Heads (NE HAS MOVED)	Ph (07) 5524 6566
Wagga Wagga (NE HAS MOVED)	Ph (02) 6931 9333
Warners Bay	Ph (02) 4954 8100
Wollongong	Ph (02) 4226 7089

• NORTHERN TERRITORY

Darwin	Ph (08) 8948 4043

• QUEENSLAND

Aspley	Ph (07) 3863 0099
Browns Plains	Ph (07) 3800 0877
Caboolture (NE HAS MOVED)	Ph (07) 5432 3152
Cairns	Ph (07) 4041 6747
Caloundra	Ph (07) 5491 1000
Capalaba	Ph (07) 3245 2014
Ipswich	Ph (07) 3282 5800
Labrador	Ph (07) 5537 4295
Mackay	Ph (07) 4953 0611
Maroochydore	Ph (07) 5479 3511
Mermaid Beach	Ph (07) 5526 6722
Nth Rockhampton	Ph (07) 4926 4155
Townsville	Ph (07) 4772 5022
Strathpine	Ph (07) 3883 6910
Underwood	Ph (07) 3841 4888
Woolloongabba	Ph (07) 3393 0777

• SOUTH AUSTRALIA

Adelaide	Ph (08) 8231 7355
Clovelly Park	Ph (08) 8276 6901
Elizabeth	Ph (08) 8255 6999
Greaps Cross	Ph (08) 8262 3200
Modbury (NEW)	Ph (08) 8265 7611
Reynella	Ph (08) 8387 3847

• TASMANIA

Hobart	Ph (03) 6272 9955
Launceston	Ph (03) 6334 2777

• VICTORIA

Cheltenham	Ph (03) 9585 5011
Coburg	Ph (03) 9384 1811
Fernlee Gully	Ph (03) 9758 5500
Frankston (HE HAS MOVED)	Ph (03) 9781 4100
Geelong	Ph (03) 5221 5800
Hallam	Ph (03) 9796 4577
Kew East	Ph (03) 9859 6188
Melbourne	Ph (03) 9663 2030
Mornington	Ph (03) 5976 1311
Ringwood	Ph (03) 9870 9053
Roxburgh Park	Ph (03) 8339 2042
Shepparton	Ph (03) 5822 4027
Springvale	Ph (03) 9547 1022
Sunshine	Ph (03) 9310 8066
Thomastown	Ph (03) 9465 3333
Werribee	Ph (03) 9741 8951

• WESTERN AUSTRALIA

Joondalup	Ph (08) 9301 0916
Maddington	Ph (08) 9493 4300
Mandurah	Ph (08) 9586 3827
Midland	Ph (08) 9250 8200
Northbridge	Ph (08) 9328 8252
Rockingham	Ph (08) 9592 8000

Arrival dates of new products in this flyer were confirmed at the time of print but delays sometimes occur. Please ring your local store to check stock details. Savings off Original RRP.
Prices valid from 24th March 2014 to 7th April 2014.

HEAD OFFICE
320 Victoria Road, Rydalmere NSW 2116
Ph: (02) 8832 3100 Fax: (02) 8832 3169

ONLINE ORDERS
Website: www.jaycar.com.au
Email: techstore@jaycar.com.au

Occasionally there are discontinued items advertised on a special / lower price in this promotional flyer that has limited to nil stock in certain stores, including Jaycar Authorised Stockist. These stores may not have stock of these items and can not order or transfer stock.

Jaycar Electronics — Better, More Technical

Salvage It!

By BRUCE PIERSON

Harvesting Old Printers for Parts

You were cleaning out your shed and you found that old Dot Matrix Printer that you bought brand new in 1995 and retired in 2002, when you bought a shiny new – and colour – USB printer. It's been gathering dust all that time and it looks like something was dropped on it, because now it's got a broken lid! Time to bin it?

Well, maybe there's some good parts inside it, so we'd better have a look and see what we can find before we toss it out.

Now to pull it apart. But where do we start? Well, that depends on which brand of printer you have. First, remove anything that can be easily taken off, such as ribbons, covers, lids, paper feeders and the like. Turn it upside down and give it a shake to see if anything else can fall out!

Now we can inspect the unit to see how it's held together. Some printers might have screws on the top, others might have clips underneath, or there could be combinations of these methods of holding it together.

In the case of screws, it's just a matter of undoing as many screws as you can find and then seeing if the two halves of the printer will separate.

With clips, you need to determine how they are undone and then undo them. Sometimes manufacturers develop fiendishly clever methods of disguising just how to do it. But eventually, you should be able to separate the two halves of the printer and see what's inside it.

Look, if all else fails don't be scared to don a pair of safety glasses and try some "percussive service" – ie, belt it with a hammer! Only destroy as much as you need to – you're going to junk the case anyway . . .

The above printer very sportingly had four screws on the top and was easy to get apart. It's a Star NX1000 which was a very popular printer in its day and is still used in countless numbers even today due to its reliability.

But it is "only" a dot matrix printer which many modern users tend to sneer at due to its limitation in printing pretty pictures! However, if you want a printer that handles multi-part forms, though, you'll find it very difficult to find one that out-performs the old dot matrix!

How does it work?

The inner workings of

USB/RS-232C

By JIM ROWE

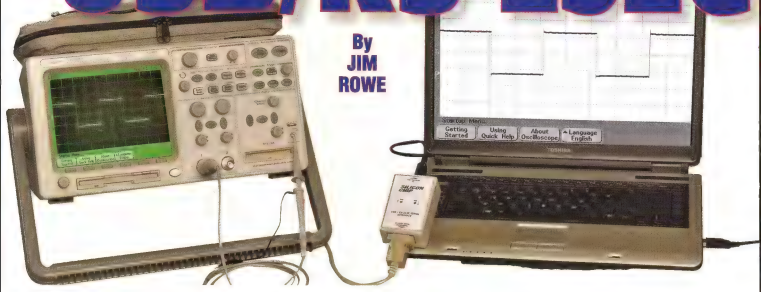

Want to connect an older test instrument or PC peripheral fitted with a 'legacy' serial RS-232C interface to your late-model PC or laptop? That is a real problem with today's PCs which only provide USB ports. Here is the solution: build this very small USB to RS-232C serial interface.

Many readers have test instruments, GPS receiver modules, Rubidium oscillators or PC peripherals which work very well but they can pose a problem when it comes to hooking them up to a current-model desktop or laptop PC.

That's because many older instruments and devices were fitted with what is now known as a 'legacy' serial RS-232C interface, while most recent PCs are only provided with USB ports.

Yes, we know you can purchase cheap USB to RS-232C interface adaptors. But many of these don't work very well – or don't work at all – with older equipment with RS-232C interfaces. Also, many of these gizmos are not compatible with Windows VCP (virtual com port) drivers and need to have a custom driver installed – which is often a problem in itself.

Cheap, not nasty!

That's why we've come up with this new interface, which can be built up at very low cost. Total cost, including the PCB, should be about $32 or less. And you should be able to assemble it in just a few hours.

All of the parts, including the input and output connectors, fit on a PCB which measures only 76 x 46mm. It fits neatly into the smallest jiffy box currently available – the UB5 size, measuring 83 x 54 x 31mm.

About the circuit

The complete circuit of the interface, shown in Fig.1, uses just two chips and not much else. At its heart is IC1, a Microchip MCP2200 'USB-UART Protocol Converter' chip, which seems to be rather similar to a PIC18F14K50 micro but is hard-wired to perform USB/serial and serial/USB conversion. On the serial side it's coupled to the inverters inside a 74HC14 hex Schmitt trigger inverter device (IC2), acting as serial drivers and receivers.

Where's MAX?

And no, we have not coupled the MCP2200 to a MAX3232 or MAX3222 multi-channel RS-232C driver/receiver device – to give the circuit 'full spec' bipolar RS-232C compatibility. Our first prototype did use that approach but we found that it would not operate reliably with a number of instruments and devices. These turned out to have a serial interface which provided only 'unipolar' 0V/+5V signal swings.

This was done (a) to save money and (b) because just about all of the serial ports on earlier PCs would interface quite reliably with these signals, even though they were nominally designed to provide and accept bipolar signal swings, ie, signal swings meeting the full RS-232C specification, which specified from -5V to -15V for a mark or '1', and from +5V to +15V for a space or '0'.

So after quite a bit of testing and experimentation we decided to replace the MAX3222 driver/receiver device with the 74HC14 shown in Fig.1. It effectively goes back to the old unipolar 'watered down RS-232C' configuration but we have found it to work reliably with all of the 'legacy'

INTERFACE

serial ports we've been able to try it with, including those with 'true RS-232C' ports as well as those with the 'watered down' approach.

We can't guarantee that it will work reliably with ALL equipment fitted with a 'true RS-232C' port, because there may be some gear out there with a finicky RS-232C driver/receiver chip which won't recognise unipolar signals. But we suspect these are few and far between, especially these days.

It's also worth noting that while the original 'full spec' bipolar signals were designed to give reliable operation over quite long cables (up to at least 15m long), the unipolar 0V/+5V signals of this interface won't be capable of anything like this. But since this interface is intended mainly to connect 'legacy' instruments and equipment to a nearby PC, this shouldn't be a problem.

Returning to the circuit of Fig.1, you can see that four of the inverters inside IC2 are used as drivers, two in parallel for the transmit data (TxD) line and the other two in parallel for the Ready-to-Send (RTS) handshaking line. The remaining two inverters are used as receivers, for the Receive data (RxD) line and the Clear to Send (CTS) handshaking line.

So what's the purpose of the 1kΩ series resistors in those 'receive' signal lines, and also for diodes D1-D4? These components are included to allow the inputs of the 'receiver' inverters inside IC2 to handle both true-RS232C bipolar swing signals as well as unipolar signals. The 1kΩ resistors limit the current flow, while the diodes ensure that the inverter inputs are 'clamped' to a maximum DC input level of +5.6V and a minimum level of -0.6V.

The circuitry around IC1 is quite straightforward. Pins 18 and 19 are the USB data lines and these connect directly to pins 2 & 3 of USB connector CON1.

Pins 2 & 3 of IC1 are the input and output pins for its internal clock oscillator which runs at 12MHz as a result of connecting crystal X1 and the 33pF and 15pF capacitors. The oscillator runs at 12MHz because it connects to an internal PLL (phase-locked loop) which effectively multiplies the clock by four, to achieve the 48MHz needed by its USB 2.0 interface engine.

Pin 17 of IC1 is its V_{USB} pin, which needs to be provided with a 470nF bypass capacitor for correct USB enumeration. Pins 5 & 6 are configured in this application to drive LEDs 1 & 2, which blink to indicate activity on the serial RxD and TxD lines.

By the way, the MCP2200 is configured from your PC, using a small (freeware) configuration utility. This can be used to configure the MCP2200 in terms of baud rate, data format and so on. We'll describe this in detail later.

No external power is needed for the circuit as it is powered from your PC itself, via the USB cable and pin 1 of connector CON1. Typical current drain varies between about 18mA and 29mA, depending on the data being sent and received; well within the 100mA limit.

Construction

As you can see from the photos and the overlay diagram of Fig.2, all of the components used in the interface are

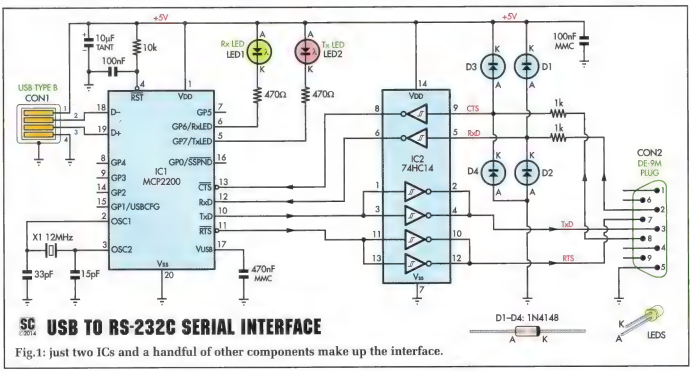

Fig.1: just two ICs and a handful of other components make up the interface.

It's housed in a small jiffy box, small enough to fit in the palm of your hand. There's no battery as it is powered from the USB port that it's connected to.

mounted on the top of a small double-sided PCB coded 07103141 and measuring 76 x 46mm. This has USB connector CON1 at one end and serial connector CON2 at the other.

The complete PCB assembly fits snugly into a UB5 jiffy box. It is used upside-down: the PCB is attached to the 'lid' of the box (which becomes the base), using four 15mm long M3 machine screws with four 6mm long untapped spacers and four M3 nuts to hold the PCB in place. The two activity LEDs protrude through matching 3mm holes in the 'base' of the box, which becomes its top.

There is only one SMD component in the project (IC1), which comes in a 20-pin SOIC package. I suggest that you solder this to the top of the PCB before any of the other components, as this makes it easier.

You can hold it in position using a pair of spring-loaded, self closing tweezers or similar while you spot-solder diagonally separated pins (like pins 1 and 11, or 10 and 20) to their pads on the PCB. Then the tweezers can be removed to give you clear access while you solder the rest of the pins on each side.

If you do create an accidental solder bridge between adjacent pins, it's usually easy to remove the bridge using narrow solder-wick (pressed against the pins concerned using the tip of your soldering iron).

All of the remaining components are through-hole parts, which can be fixed to the PCB in the usual way. Fit the resistors first, followed by the capacitors, taking care with the polarity of the 10µF tantalum, which is the only polarised capacitor.

Then fit crystal X1, followed by diodes D1-D4 – using the diagram Fig.2 to guide you regarding their polarity.

Next fit IC2, the pins of which can be either soldered directly to the pads under the PCB or plugged into a 14-pin DIL socket soldered into the PCB. Then both CON1 and CON2 can be fitted, noting that each connector is held onto the PCB via a pair of lugs which are soldered to the copper underneath in addition to the actual connection pins.

The final components to be added are LED1 and LED2, which are mounted vertically above the PCB with their leads left at almost full length, so the underside of each LED body is about 16mm above the top surface of the PCB. Make sure you fit the green LED in the correct position for LED1 and the red LED in the LED2 position, and also make sure that they are both orientated with their longer anode lead to the right (towards CON2) as shown in Fig.2.

Box drilling

Your PCB assembly should now be complete, ready for mounting to the box lid. But first you'll need to prepare both the box and its lid, by drilling and cutting the various holes shown in Fig.3.

There are eight holes in all - four in the lid for mounting the PCB, two in the 'base' of the box for the two activity LEDs, and a rectangular hole at each end for access to connectors CON1 and CON2.

Assembly

After you have drilled and cut all of the holes and finally removed any burrs, you should be ready to mount the PCB assembly inside the lid. This involves passing the four 15mm long M3 screws up through the holes in the lid, and fitting each one with an untapped 6mm long spacer.

The PCB assembly can then be lowered into position with the ends of the screws passing through the matching holes near each corner of the PCB. Then four shake-proof washers and M3 nuts can be fitted to the screws to hold the PCB in position.

If you'd like to give your Interface a 'front panel' like the one you can see in our photographs (mainly to identify LED1 and LED2), we have prepared the artwork which can be downloaded from siliconchip.com.au This can be printed and then laminated in a plastic sleeve for protection

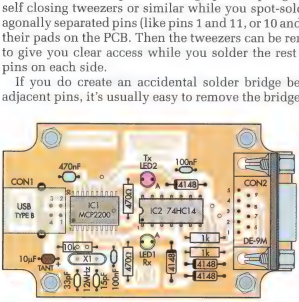

Fig.2 (left): the component overlay, with a matching same-size photograph at right.

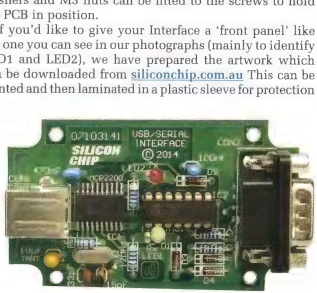

and finally cut to shape and attached to the outer surface of the base of the box (which becomes the top) using thin double-sided cellulose tape.

The box can then be up-ended and lowered down over the PCB-and-lid assembly, orientated so that the end with the longer rectangular cut-out is at the CON2 end of the PCB. Make sure that the two LEDs pass up and just protrude through their matching holes. Then the four small self-tapping screws supplied with the UB5 box can be used to fasten the box and lid together, to complete the assembly.

You may also want to attach four small adhesive rubber or plastic feet to the lid/underside of the Interface, to ensure that the screw heads don't scratch any surface it's placed on.

Configuring the MCP2200

While there are no adjustments to be made to the Interface before it can be used, the MCP2200 USB-serial protocol converter chip (IC1) does need to be configured to suit your particular application.

As mentioned earlier, this is done by connecting the Interface to one of the USB ports on your PC and then running Microchip's freeware Configuration Utility.

When you first connect the Interface to a USB port on your PC (assumed to be running), Windows will respond by installing its standard 'virtual COM port' driver. You can then call up Device Manager (usually via Control Panel) and look under 'Printers and Devices' to make sure that you now have a 'USB serial port'. Otherwise you may need to download and install the Microchip Serial Port Driver from the link mentioned below.

Check its Properties to learn which COM port number

Parts List – USB/RS232C Interface

1 UB5 jiffy box, 83 x 54 x 31mm
1 PCB code 07103141, 76 x 46mm
1 12.00MHz crystal, HL-49U/US (X1)
1 USB type B connector, PC-mounting (CON1)
1 DE-9 male connector, PC-mounting (CON2)
4 15mm long M3 machine screws, pan head
4 6mm long untapped spacers
4 M3 nuts with shake-proof washers
4 adhesive rubber or plastic feet (optional)

Semiconductors
1 MCP2200-I/SO USB 2.0 to UART protocol converter (IC1)
1 74HC14 hex Schmitt trigger inverter (IC2)
4 1N4148 100mA diodes (D1-D4)
1 3mm green LED (LED1)
1 3mm red LED (LED2)

Capacitors
1 10µF 16V tantalum electrolytic
1 470nF 50V multilayer monolithic ceramic (474 or 470n)
2 100nF 50V multilayer monolithic ceramic (104 or 100n)
1 33pF NP0 disc ceramic (33 or 33p)
1 15pF NP0 disc ceramic (15 or 15p)

Resistors (0.25W 1%)
1 10kΩ (brown black orange brown or brown black black red brown)
2 1kΩ (brown black red brown or brown black black brown brown)
2 470Ω (yellow violet brown brown or yellow violet black black brown)

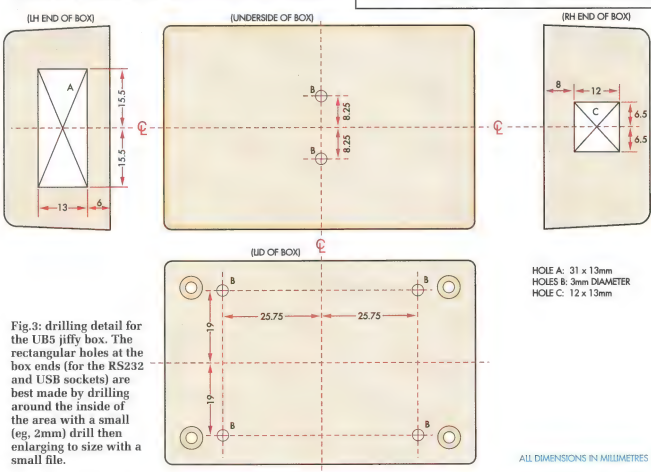

Fig.3: drilling detail for the UB5 jiffy box. The rectangular holes at the box ends (for the RS232 and USB sockets) are best made by drilling around the inside of the area with a small (eg, 2mm) drill then enlarging to size with a small file.

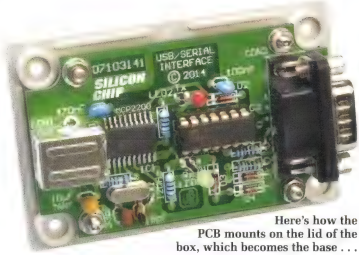

Here's how the PCB mounts on the lid of the box, which becomes the base . . .

it has been given, the data format it has set (8 data bits, no parity and one stop bit are usually best) and also check whether Windows is advising that it is 'working properly'.

Set the driver's baud rate to match that of the instrument/GPS receiver module/Rubidium oscillator or whatever you're going to be using the Interface to communicate with. This will probably be either 4800 or 9600baud (bps) but you may need to check in its user manual to make sure.

Assuming this first step has gone smoothly, the next step is to download and install Microchip's custom MCP2200 Configuration Utility. This can be downloaded from their website by typing in this URL: www.microchip.com/MCP2200. Click on 'documentation and software', then scroll down until you find the MCP2200 Configuration Utility. It's a 5.3MB zipped file.

After unzipping, this provides a self-installing version of the MCP2200 Configuration Utility.

When you run this then fire up the utility itself, you should see a window like that shown in Fig.4 – although you won't see any text as yet in the large 'Output' box. This box will be blank initially, while some of the smaller boxes may also have different contents.

Before you click on the 'Configure' button at bottom left, you'll need to ensure that the contents of all of these smaller boxes are as shown in Fig.4. You probably won't need to change the contents of the Manufacturer, Product, Vendor ID or Product ID boxes, nor will you need to click on the 'Update VID/PID' button.

But you may need to click on the check box next to the label 'Enable Tx/Rx LEDs', to display the tick as shown.

It's also possible that you may need to click on the check box next to 'Enable CTS/RTS pins', if the serial device you're going to be communicating with needs this kind of handshaking. But this is unlikely with most of the devices you'll want to communicate with using the Interface.

If the Baud Rate: text box is not showing the baud rate you want, click on the down arrow to its right to get the drop-down list box, and then select '4800' or '9600' or whatever baud rate you do need from the list. Then if the I/O Config: text box is showing something other than '00000000', click inside the box so that you can type in the correct '00000000' text string.

Similarly if the Output Default: text box is not showing '11111111', click inside that box and type in that text string yourself.

Now turn your attention to the LED Function box at lower right, and if necessary click on the 'Blink LEDs' radio button if this isn't displaying the 'selected' bullet. Similarly click on the '100ms' radio button so that it too is selected.

At this stage you should be seeing a display very much like that shown in Fig.4, apart from a blank output window. If this is so, you can now click on the Configure button at lower left. There should then be a brief pause while the Config utility 'does its thing' with the MCP2200 chip in your Interface; then the text shown in Fig.4 should appear in the Output window to show that the configuration has been done and your Interface is now communicating with the PC via the USB cable. You can then close the Config utility, because your USB-Serial Interface is now configured and ready for use.

What if you decide at a later time that you want to use the same Interface to communicate with a different serial device? That's not really a problem, because all you'll need to do is fire up the MCP2200 Configuration Utility again and use it to reconfigure the Interface's MCP2200 to suit the 'new' serial device. You'll be able to change the baud rate, disable the CTS/RTS pins if handshaking is not needed any more, and so on.

A few words about cables

That's about it as far as the Interface itself is concerned, but before closing we had better give some basic information regarding RS-232C serial cables and the ways in which they're wired. That's because it's not easy to buy this type of cable nowadays, so you may need to wire up one or more cables yourself.

Another possibility is that you may have one or two older serial cables, but are not sure how they're wired. This can be frustrating if you try using one to connect between the Interface and a particular device and find they won't 'talk

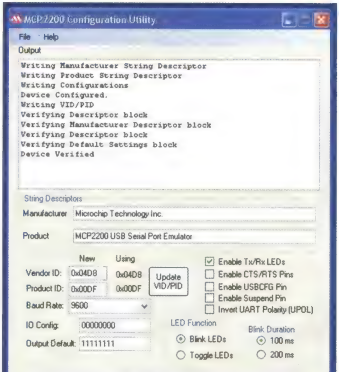

Fig.4: Microchip's Configuration Utility, which can be downloaded free of charge (see URL in text).

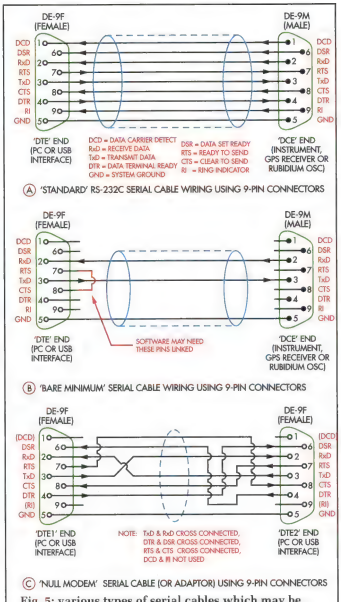

Fig. 5: various types of serial cables which may be required for the interface

to each other'.

First of all, most serial ports on older PCs used DE-9 nine-pin connectors rather than the DB-25 25-pin connectors originally used to interconnect RS-232C serial devices like teleprinters and dial-up modems with minicomputers and mainframes. So you'll probably only have to concern yourself with cables fitted with a nine-pin connector at each end.

The next thing to be aware of is that many 'RS-232C' serial devices didn't use 'hardware' handshaking at all. Instead of using any of the handshaking lines of the serial ports and cables, they simply implemented a simple software-driven handshaking protocol, sometimes called "X-on/X-off"). As a result these devices may not even need you to use a nine-conductor cable at all: just a stripped down or 'bare minimum' three-wire cable, with only the RxD and TxD data lines plus a ground line.

But be warned: even though the device itself may not need any of the handshaking lines, the software running in your PC might need to be 'tricked' into thinking that the device is ready for action, by linking together some of the pins at the Interface end of the cable (the RTS and CTS pins, for example). Otherwise the software may regard the device as 'not present' or 'busy'.

Right, now take a look at Fig.5, which shows in (a) the way a standard RS-232C serial cable was wired up using 9-pin connectors. You can make up this kind of cable very easily using IDC-type DE-9 connectors and a length of standard IDC ribbon cable, because all of the wires have a 'straight through' connection – pin 1 to pin 1, pin 2 to pin 2 and so on.

The main thing to remember is that the PC or Interface end of this cable (the so-called 'DTE' end, standing for 'data terminal equipment) has a female (DE-9F) connector, while the other end (the 'DCE' or 'data comms equipment' end) is usually fitted with a male (DE-9M) connector.

This type of cable should be fine for connecting the PC (via the Interface) to many types of 'legacy' serial device. But just so you'll be aware of the options, take a look at Fig.5(b). This shows the wiring of a 'bare minimum' three-wire cable, which only provides the RxD and TXD data lines plus the ground line. You should be able to use this much simpler type of cable to communicate reliably with many of the 'legacy' devices using our new USB-serial Interface – although you may find it necessary to link pins 7 (RTS) and 8 (CTS) of the connector at the PC/Interface end, to keep the software 'happy'. That's why the diagram shows the link between these pins in red.

Finally, Fig.5(c) shows the wiring for a so-called 'null modem' serial cable or adaptor. Quite possibly you won't need to worry about this type of cable/adaptor, because it was really only used to allow two PCs to be hooked up to each other directly via their serial ports, for exchanging data files etc (although we did need to do this to connect the old Agilent scope shown in the opening photo).

As you can see, this type of cable/adaptor has a female DE-9 connector at each end. It also has 'crossover' connections linking the RxD and TxD data pins, the DTR and DSR pins and also the RTS and CTS pins - so the 'outputs' at each end connect to the 'inputs' at the other.

A cable wired up this way won't work if you try to use it to connect your PC and Interface to a 'legacy' device like a test instrument, a GPS receiver module or a Rubidium oscillator. You'll need to either use a different cable or rewire it to remove the crossover connections. SC

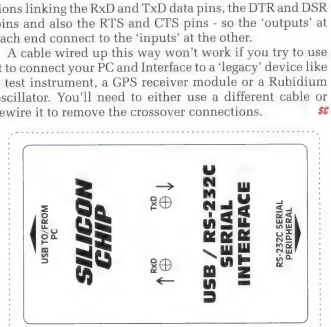

Fig.6: this front panel artwork (which actually attaches to the bottom of the box) can also be downloaded from the SILICON CHIP website (www.siliconchip.com.au).

CIRCUIT NOTEBOOK

Interesting circuit ideas which we have checked but not built and tested. Contributions will be paid for at standard rates. All submissions should include full name, address & phone number.

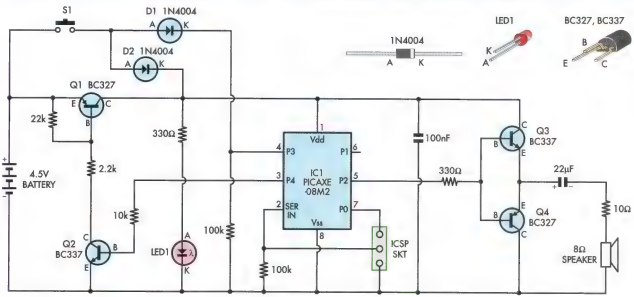

PICAXE-based music box or doorbell

This project started out as a music box for a child but using a different program, it could also be used as a battery-powered doorbell.

When pushbutton switch S1 is pressed, power is applied to the circuit via diode D2. The PICAXE program then starts and the first instruction is to send pin 3 high which turns on transistors Q2 & Q1, latching the supply on. LED1 then indicates that power is on and that switch S1 has been pressed. Pin 4 is pulled high via diode D1 to let the program know that the switch is on.

Transistors Q3 & Q4 operate as complementary emitter followers to drive the loudspeaker via a 10Ω resistor and 22µF capacitor. This provides limited bass response which is more than adequate for the tones produced by the various tunes.

The unit provides two sets of seven tunes which are selected at random by the program when S1 is pressed. The first set are Christmas tunes but all tunes can be changed. There are many hundreds available through the PICAXE website.

At start up, if switch S1 is pressed for less than three seconds, the first set of tunes is selected but if the switch is held on for longer than three seconds, a short "blip" is played and the second set of tunes is selected. The selected set of tunes is played when the switch is released. Subsequent presses of the switch will play another tune from that set.

If the switch is not pressed or is held on for two minutes a series of 2-tone "blips" is played over the next minute. Unless the switch is operated within that time, the "Death March" is played and pin 3 is pulled low, turning Q2 & Q1 off and shutting off the power.

For the doorbell function, when switch S1 is pressed, pin 3 is pulled high as before to latch the power on and the program then waits for the switch to be released. When that happens, a sound is played that sounds much like those "ding dong" door minders that are used in many shops.

Again the tune can be changed to whatever you like and changed again when you tire of it. A 5-second delay disables operation as the circuit is powered down ready for S1 to be pressed again. This prevents impatient people from pressing the button repeatedly over a short period.

Note that switch S1 must be held on to power the circuit while the program is downloaded. The software MusicBox3.bas can be downloaded from the SILICON CHIP website.

Bill McKinley,
Ingle Farm, SA. ($45)

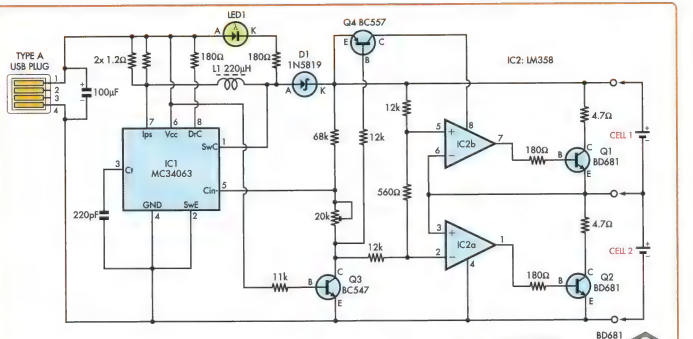

2-cell lithium-polymer charger has balancing feature

The heart of this circuit is IC1, an MC34063 configured as a boost regulator. It's commonly used in inexpensive voltage regulating circuits such as those used for phone chargers. In this case, it is set to charge two lithium-polymer cells in series and the 12kΩ & 68kΩ feedback resistors connected to IC1's pin 5 set the final charge voltage to a little less than 8.4V, that being the fully charged voltage of two LiPo cells.

USB ports can supply a maximum of 500mA and LiPo cells should be charged at a constant current, below the final voltage of 8.4V. Current limiting on an MC34063 kicks in when pin 7 is 300mV below the supply voltage at pin 8. Here the current is limited to 300mV/0.6 or 500mA by the paralleled 1.2Ω resistors in series with the supply fed to pin 7. However, this is the peak current.

When used as a boost regulator, the MC34063 works in discontinuous mode, ie, the current through the inductor does not flow continuously. Hence, the current fed to pin 7 rises from zero to the peak current and then drops back to zero. Inductor L1 and the 220pF timing capacitor at pin 3 have been chosen to give an approximate duty cycle of 50%. This means that the average output current is 250mA.

This part of the circuit works such that while ever the battery voltage is less than 8.4V, the average current fed to the series-connected cells is 250mA. Once the battery voltage reaches 8.4V, IC1 starts regulating the voltage. LED2 is on when the charger is in constant current mode. It starts to blink when the battery is approaching 8.4V and is goes off when the battery is fully charged.

Transistor Q3 disconnects the voltage feedback resistors when the charger is not plugged into a USB port, so that the feedback resistors do not drain the battery. Once this section of the circuit is built, check that the output voltage is 8.4V (or slightly less) and connect it to the two cells.

The second part of the circuit is the balancer and ensures that the cells remain in balance and each cell is never charged above its maximum voltage of 4.2V. It comprises IC2 (an LM358 dual op amp) and transistors Q1, Q2 & Q4. Q3 is used to switch the supply to IC2 so that the balancer only works when the batteries are being charged.

The two op amps in IC2 are configured as a window comparator and pins 3 & 6 are connected together to sense the mid-point of the battery pack. This is compared with half the battery pack voltage via the two 12kΩ resistors.

If the mid-point of the cells is above the midpoint of the battery charging voltage, ie, cell 2 is charged more than cell 1, the outputs of the window comparator (IC2a & IC2b) will switch Q1 off and Q2 on, thus diverting all the charge current into cell 1. Then as the voltage of cell 1 increases above that of cell 2, Q1 will be switched on and Q2 off, diverting the charge current into cell 2.

To stop the circuit oscillating at a high frequency, the 560Ω resistor between pins 5 & 2 has been included to provide hysteresis of about 160mV. That is the maximum out-of-balance voltage that will be allowed between the two cells.

This circuit could be configured to provide a maximum of 750mA charging current, limited by the maximum switch current in IC1 and the maximum current available from a USB supply, by changing inductor L1, the timing capacitor and the 1.2Ω current setting resistors.

Robert Budniak,
Denistone, NSW.

Robert Budniak is this month's winner of a $150 gift voucher from Hare & Forbes

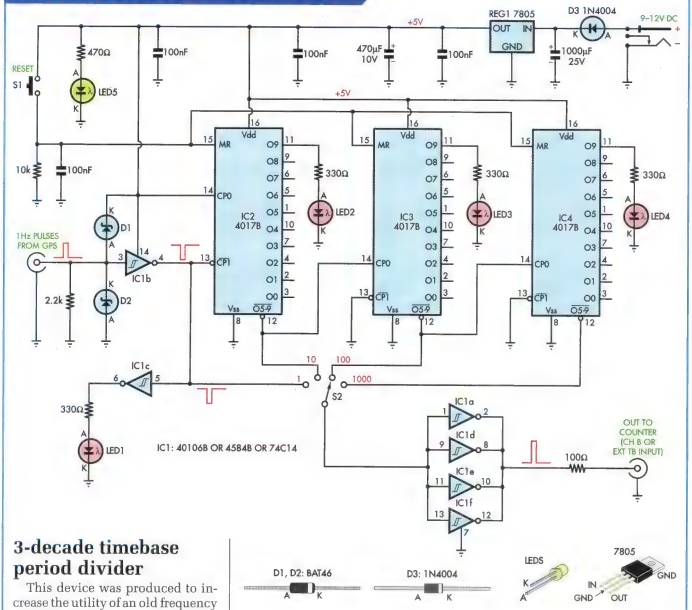

3-decade timebase period divider

This device was produced to increase the utility of an old frequency counter, in this case a Hewlett Packard HP5316A, a dual-channel 8-digit-plus-exponent 100MHz counter which had provision for an external timebase of 1MHz, 5MHz or 10MHz.

In order to use that counter with the very accurate 1pps pulses from the GPS Frequency Reference (April-May 2007) or the GPS 1pps Timebase (April 2013) as its timebase, the only way of doing this is to use its 'Frequency Ratio' mode – with the frequency I wanted to measure fed into its A channel and the accurate 1pps signal fed into its B channel. Much the same approach would be needed with many other vintage frequency counters.

This device is an external 'timebase period divider' that allows the HP5316A counter to make accurate frequency measurements with a resolution down to 1mHz (0.001Hz).

It 'squares up' the incoming 1pps signal from a GPS receiver or timebase in IC1b, which is provided with a degree of input overload protection via D1 and D2. The output of IC1b is then fed to the 3-decade divider chain using IC2, IC3 and IC4, which are all 4017B Johnson-type CMOS synchronous decade counters.

Rotary switch S2 allows you to select either the output pulses from IC1b ('1'), or the O5-9-bar outputs from IC2 ('10'), IC3 ('100') or IC4 ('1000'), to feed out through the buffer formed by IC1a/d/e/f to the output connector at lower right and thence to the counter. The end result is to give the counter a total of four different timebase ranges, all derived from the GPS 1pps pulses.

Pushbutton switch S1 allows you to reset all three dividers just before you begin a new measurement. This avoids a long wait while nothing happens, because one or more of the dividers were already in mid-count.

LED5 lights when the circuit is powered up while LED1 lights when input pulses are present. LEDs 2-4 indicate when each divider is reaching the end of its count cycle.

Jim Rowe,
Silicon Chip.

Does your design need a programmable USB power controller for active cables and 12W charging?

UCS100x family supports Apple® Lightning™ connectors and AC-DC wall adaptors

The world's first programmable USB power controllers offer flexible charging emulation profiles, for wider compatibility and easy upgrades, plus higher current and priority charging for smart-phones and tablets.

The latest members of Microchip's UCS100x family of USB-port power controllers provide advanced USB-charging capabilities and support for active cables, such as the Apple® Lightning™ connector, and 12W charging.

Nine pre-programmed charger emulation profiles provide maximum compatibility with existing profiles, whilst the UCS1002-2 also offers a customisable emulation profile with the flexibility to update designs to support future profiles. The UCS1002-2 also adds an on-chip current sensor for optimised charging and intelligent power allocation.

The new UCS100x controllers offer higher current and priority charging for smartphones and tablets and can detect attachments from sleep or off states. They also provide a selectable current limit with an over-current trip or constant current limiting in addition to protection features which include under- and over-voltage lockout, back-drive and back-voltage protection, and latch or auto-recovery fault handling.

DEVELOPMENT TOOL SUPPORT:

1. ADM00540 for the UCS1001-3 and UCS1001-4 USB-port power controllers
2. ADM00497 for the UCS1002-2 with customisable emulation profile and current sensor

www.microchip.com/usb

UCS1001 Evaluation Board (ADM00540)

microchip DIRECT
www.microchipdirect.com

Microchip Technology Australia
Tel: (02) 9868 6733 E-mail: aust_nz.inquiry@microchip.com

MICROCHIP

Microcontrollers • Digital Signal Controllers • Analog • Memory • Wireless

The Microchip name and logo is a registered trademark of Microchip Technology Incorporated in the U.S.A. and other countries. All other trademarks mentioned herein are the property of their respective companies.
© 2014 Microchip Technology Incorporated. All rights reserved.

For laboratory-standard frequency measurements . . .

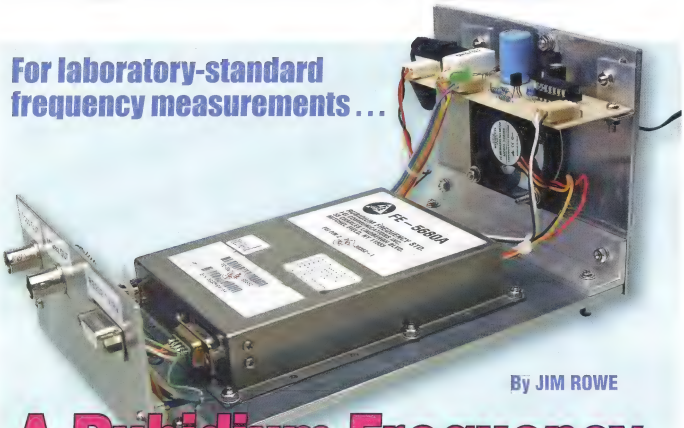

By JIM ROWE

A Rubidium Frequency Standard For A Song

How would you like to have a precision rubidium frequency standard on your workbench to enable you to make laboratory-standard frequency measurements? It's now possible and for a very low price – just buy a used Rb-vapour frequency standard on-line and build a simple power supply and buffer circuit.

AS MENTIONED in the February 2014 issue of SILICON CHIP, used rubidium-vapour frequency standards are available via eBay from suppliers in China and elsewhere, for very low prices. But how easy is it to get one of these devices going again? This article explains what was involved in getting one up and running (it was really quite straightforward).

When I was writing the February 2014 article, I discovered that quite a few ex-telecom Rb standards were being offered on eBay at very attractive prices – anywhere between $US99 and $US250 (plus shipping). So as mentioned in the February article, I took the plunge and ordered one. It arrived a couple of weeks later and I began planning how to bring it back to life.

The unit I acquired was an FE-5680A (see photo), originally made by US firm Frequency Electronics Inc. This seems to be one of the most common 'retired' Rb-vapour standards currently on offer, although if you search on eBay and elsewhere you'll also find others like the LPRO-101 from Symmetricom/Datum/Ball/Efratom.

I should mention that although you'll find quite a few FE-5680A standards on offer, they're not all the same (even those that look almost identical). In fact, the model name 'FE-5680A' seems to have been used for a plethora of Rb-vapour frequency standards.

The many versions offer different options, such as (1) the output frequency (10MHz, 2.048MHz, 5MHz, 10.23MHz, 13MHz, 15MHz or adjustable between 1Hz and 20MHz); (2) whether the RF output is a sinewave or a square wave; (3) whether or not the RF output is brought out via a separate SMA connector or just via a pin on the unit's main DE-9 connector; and (4) whether or not it can be controlled remotely via an RS232C serial interface.

Further options specify the required power supply voltage(s), whether or

not it can be fine-tuned via an analog tuning voltage (0-10V) and the polarity of the 'locked to rubidium' logic output signal (ie, LOCK or LOCK-bar).

So you need to be cautious in selecting an FE-5680A from those being offered. If you intend using it as a frequency and time standard, choose one that's advertised as having a 10MHz sinewave output (available from either pin 7 on the DE-9 connector or from a separate SMA connector), can be controlled remotely via an RS-232C serial interface, has a LOCK-bar output (on pin 3 of the DE-9 connector) and needs both +15-18V and +5V supplies (this is the version I bought).

Step 1: collecting info

Although the FE-5680A I bought had a small label on the top of the case showing the main DE-9 pin connections and the supply voltages, it didn't identify all the pins and their functions. So before attempting to fire it up, I decided to collect as much information on the FE-5680A series as I could.

A quick search on the internet soon turned up quite a lot of useful information. Most of this came from the links shown in the 'Handy Links' panel at the end of this article, so I suggest you go to these first to save time. The Time Nuts mailing list archive is particularly informative, not just regarding the FE-5680A but for all kinds of stuff on time and frequency standards and their use.

Most of the important information on the FE-5680A is summarised in Fig.1. Armed with this data, I was then able to knock up a suitable power supply on a breadboard. This comprised a surplus 18V/2.5A laptop PC power supply to provide the main 15-18V rail plus a simple 3-terminal regulator to derive a +5V logic supply rail.

At that stage, I was simply going to power up the FE-5680A, so I didn't provide anything else as I thought I'd be able to do all of the initial checking with a digital multimeter, digital scope and a frequency counter.

Step 2: applying power

When you first apply power to a rubidium-vapour standard like the FE-5680A, it draws a fairly substantial current from the main 18V supply (about 1.8A). That's because it has to 'warm up' everything inside the 'physics package'. It's only after the electronic circuitry has been able to achieve frequency lock (to the frequency corresponding to the energy difference between the two 'hyperfine split ground state' levels of the rubidium atoms in the resonance cell) that the current begins dropping down to its 'running locked' level of 600-900mA.

FE-5680A Series Rubidium Frequency Standard – Basic Information

DE-9M Connector Pinouts (as viewed from front):

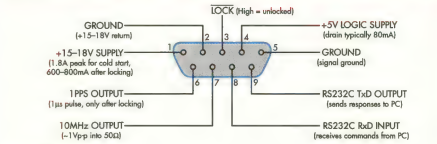

Basic Specification:

Output Frequency:	10MHz
Waveform:	sinusoidal
Minimum amplitude:	0.5V RMS into 50Ω
Adjustment Resolution:	$<1 \times 10^{-12}$ over range of 3.8×10^{-6}
Short Term Stability:	1.4×10^{-11} (1 – 100 seconds)
Drift:	2×10^{-9} per year, 2×10^{-11} per day
Phase Noise:	–100dBc @ 10Hz; –125dBc @ 100Hz; –145dBc @ 1000Hz
Input Voltage Sensitivity:	2×10^{-11} (15V – 16V)
Frequency vs Temp:	$\pm 3 \times 10^{-10}$ (–5°C – 50°C)
Spurious Outputs:	–60dBc
Harmonics:	–30dBc
Warm-up Time:	<5 minutes to lock, at 25°C

RS232C Serial Commands & Responses from the FE-5680A (9600 bps, 8N1, no handshaking)

COMMAND FORMAT (hex)	FUNCTION	RESPONSE BY FE-5680A
2D 04 00 29	Request current Frequency Offset	2D 09 00 24 aa bb cc dd <dcsm>*
2E 09 00 27 aa bb cc dd <dcsm>*	Change temporarily to a new Frequency Offset	(Temporarily changes Frequency Offset to [aa bb cc dd] hex)
2C 09 00 25 aa bb cc dd <dcsm>*	Change Frequency Offset to new value, Save in EEPROM	(Changes Frequency Offset to [aa bb cc dd] hex, saves in memory)

* <dcsm> = Ex-OR (bitwise) checksum of all four preceeding hex data bytes [aa, bb, cc, dd]

Fig.1: here are the pin connections, the main specifications and the RS232C commands for the FE-5680A series of rubidium frequency standards.

Used FE-5680A Rb-vapour standards are available on eBay from China for less than $150 including postage.

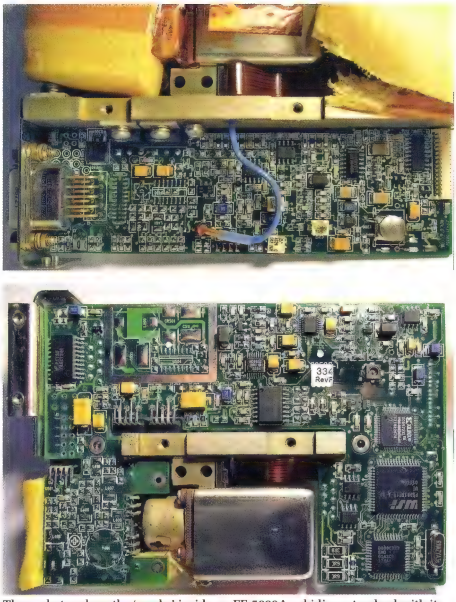

These photos show the 'works' inside an FE-5680A rubidium standard with its mu-metal case removed. The upper shot is a top view, with the physics package and its shock-protective foam at the top. The quartz oscillator crystal is at lower right, with a silver-coloured thermistor above it. To its left is the small trimcap (C217), used to correct for long-term drift. The lower shot shows the underside of the assembly, with the underside of the physics package at bottom centre.

This usually takes no more than about five minutes.

During this time, the current drain stays relatively high until locking is achieved and if you monitor the RF output (at pin 7 on the DE-9 connector) with a counter, you'll find that it swings up above 10MHz and then swings down below this again. Generally, it repeats this up-and-down sweeping a number of times, as the electronics 'searches' for the small dip in the photodetector's output which corresponds to rubidium resonance. Then, when the dip is found, the output frequency is 'locked to rubidium' – ie, very close to 10.000000MHz.

The internal logic also pulls down the voltage level of the LOCK-bar output (pin 3 of the DE-9M connector), while a 1µs-wide output pulse appears at the 1pps output (pin 6) once every second. But neither of these happens unless a lock has been achieved.

When I first applied power to my FE-5680A, I was monitoring the current drawn by pin 1 of the DE9 connector with one DMM and the voltage at pin 3 with another DMM. Sure enough, the current drain started off at about 1.85A and then began dropping – slowly at first and then somewhat more rapidly until it nudged below 800mA. This took about seven minutes but as the unit probably hadn't been powered up for a few months I wasn't unduly concerned about the time it had taken.

What did concern me though, was that the voltage at pin 3 (LOCK-bar) remained high at about +4.9V, showing that the FE-5680A still hadn't locked. There were no 1pps pulses appearing at pin 6 either – another sign that it hadn't locked.

The 'clincher' came when I started to monitor the FE-5680A's RF output (pin 7) with my counter. It was still sweeping up and down between about 9,999,790Hz and 10,000,065Hz, every 10-15 seconds or so. Clearly it was going through the motions of searching for a lock but for some reason never finding it.

I left it searching this way for an hour or so, in case it was especially slow on the uptake. However, when it still hadn't achieved a lock after two hours, I turned off the power and went back to the Time Nuts archive and KO4BB's FAQs, looking for clues on how to tackle an FE-5680A that wouldn't lock.

One clue I found was that if an FE-5680A wouldn't lock, it could be because the internal crystal oscillator had 'drifted' a bit in frequency. This could be enough to prevent the 'searching for a lock' sweeping operation from swinging sufficiently either side of the lock frequency (ie, above and below 10MHz). The solution was to open the unit up and adjust a small trimmer capacitor near the crystal (C217), to correct for the drift.

However, I was dubious as to whether this was the cause of my particular unit's problem, because it did seem to be sweeping above and below 10MHz by a comfortable margin. So I signed up to the Time Nuts mailing list/forum and posted a request for any further information that might be forthcoming from the experts.

There were a few further suggestions but when I tried these out my unit still refused to lock. As a result, I removed the two halves of the FE-5680A's mu-metal case to reveal its 'works'. It was then just a matter of finding trimmer C217, giving it a small nudge (clockwise at first, because there was no hint as to which would be the correct direction), then screwing on the two case halves again and testing to see whether it would now lock.

It still wouldn't lock and when I subsequently used a counter to check the maximum and minimum frequencies while it was searching, these didn't seem to be all that different. So perhaps I had picked the wrong direction for my initial nudge of C217? There was nothing for it but to open it up again and try giving C217 a slightly larger nudge, this time in an anticlockwise direction.

It still refused to lock so I repeated this process a few more times but still without success. Then, deciding that the problem must be due to something else, like a worn-out rubidium lamp or a broken photodetector, I began looking around inside the unit and checked a few voltages and signal frequencies.

By this stage I had discovered a partial schematic for the FE-5680A, which can be downloaded from the last link in the Handy Links panel. However, this didn't turn out to be very helpful when it came to this particular problem, because it doesn't include any details of what's inside the 'physics package' like the lamp or photodetector.

I was getting nowhere, so I contacted the eBay vendor I'd bought it from and he offered to replace the unit. I duly sent it back and the replacement unit turned up a few weeks later.

When it was unpacked, it appeared to be identical to the first unit, apart from having a different serial number. I connected it up as before, monitoring the current from the +18V supply and the voltage at the LOCK-bar pin using two DMMs. As before, I also used my counter to monitor the output frequency as it searched for a lock after switch-on.

What happened then was exactly the same as with the first unit. The scope showed that there were no pulses from the 1pps output and the counter showed that the RF output was just sweeping back and forth through 10MHz, without showing any signs of a lock. This continued despite leaving it on for another hour or so.

By the way, I had previously read that rubidium standards like the FE-5680A should not be allowed to run for very long without using a cooling fan, so I had pulled a small 12V fan from the junk box and rigged it up to keep the unit from getting too hot.

A lucky breakthrough

I went back to scouring the various reference sources, to see if I could find the answer. And after a while I found a note that the physics package in rubidium standards was quite sensitive to external magnetic fields – that's the reason for housing them inside a mu-metal enclosure, after all. I then wondered if the difference between the Earth's magnetic field in Sydney and that in Quangzhou might be just enough to result in a 'failure to lock' – despite the mu-metal enclosure or perhaps because the enclosure had somehow become magnetised.

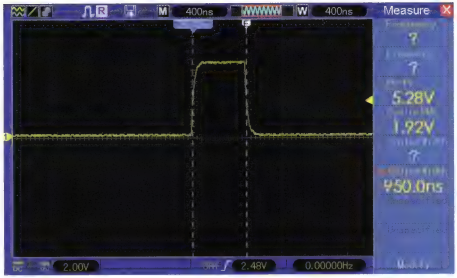

Fig.4: once the FE-5680A has 'locked to rubidium', it provides one of these 950ns-wide 1pps output pulses each second.

It occurred to me that one way to test this theory might be to turn the 'new' FE-5680A upside down, to roughly reverse the direction of the Earth's field around it. So I turned it off, let it cool down, turned it upside down and then turned the power on again.

Bingo! Within about three minutes, it found a lock and stayed locked for another few hours while I left it on to make sure. The voltage at the LOCK-bar output (pin 3) stayed down at about +0.35V, while the scope showed 1µs-wide 1pps pulses coming from pin 6. What's more, the counter remained steady at a reading very close to 10MHz, even when I changed to longer and longer gating times to achieve maximum resolution.

Only when I went to a 1000-second gating time did I see that the FE-5680A's output frequency was a whisker below 10MHz: 9,999,999.992Hz, in fact.

At that stage, I hadn't made any attempt to adjust the 'offset' by sending commands to it from a PC via the RS232C serial port. So the unit was still running with whatever offset figure had been stored in its EPROM way-back-when. Small wonder that it was locking to a frequency of 'not-quite' 10MHz but just 0.008Hz (eight milliHertz!) short of it.

By the way, the exact resonant frequency of the resonance cavity inside every rubidium-vapour reference depends on many parameters, some of them quite subtle. That's why they need to be programmable in terms of the 'offset' that needs to be applied to their internal frequency synthesiser, to bring their locked output frequency to the correct figure. This offset programmability also allows them to be recalibrated from time to time, to correct for any long-term drift.

It even allows them to be 'locked' to the GPS system, by comparing the timing of their 1pps pulses with those from a GPS receiver, but more about this later.

Another surprise

So why did the FE-5680A have to be turned upside down to achieve the lock? I could only guess that it was because of the slightly different flux density and orientation of the Earth's magnetic field at my house.

To check this theory, I turned the power off and let it cool down again. I then returned it to the right-side-up orientation and reapplied power. Much to my surprise, it quickly achieved a lock, this time in about two minutes and 25 seconds. And when I repeated this test a few more times, the same thing happened!

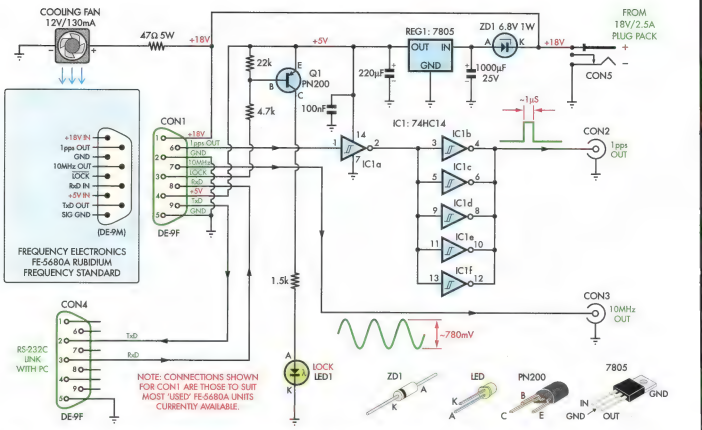

SC 03014 RUBIDIUM FREQUENCY/TIME STANDARD TEST RIG

Fig.2: the circuit for the complete test rig, including the breakout board. A 74HC14 hex Schmitt inverter (IC1a-IC1f) is used as an output buffer for the 1pps output from the FE-5680A rubidium standard, while transistor Q1 buffers the LOCK-bar output to drive lock indicator LED1. An 18V plugpack supply powers both the FE-5680A and its cooling fan, while zener diode ZD1 and regulator REG1 derive the 5V supply for IC1, Q1 and the logic inside the FE-5680A.

Somehow, whatever had initially prevented it from achieving a lock when it was the right way up had fixed itself and the unit was now able to lock reliably regardless of its orientation.

Building a test rig

It was now time to set the FE-5680A up as a working frequency and time reference. The first step was to build a test rig using some pieces of 4mm-thick sheet aluminium (see photo). There's a bottom plate to act as a heatsink for the FE-5680A, plus a back-plate to support the 12V fan and a small 'breakout board' for the power supply, lock indication and interfacing circuitry. There's also a smaller front-plate to support a DE-9F serial port connector, plus BNC sockets for the 10MHz and 1pps (one pulse per second) outputs. It's utilitarian but it works (you could also build it into a case, such as the Jaycar HB-5446).

The circuit for the complete FE-5680A test rig is shown in Fig.2. The FE-5680A itself is shown as a blue rectangle at centre left and all the connections to it are made via DE-9F connector CON1. As shown, the TxD and RxD connections on pins 8 & 9 are fed directly through to DE-9F connector CON4 on the rig's front panel.

CON4 is for connecting the test rig to a PC. However, PCs and laptops no longer have an RS232 interface, I have designed an RS232-to-USB interface and that device is described elsewhere in this issue. This can not only be used with the rubidium frequency standard but can be used anywhere a legacy instrument with an RS232 interface needs to be hooked up to the USB port of a current-model PC.

Getting back to Fig.2, the FE-5680A's 10MHz output from pin 7 of CON1 is fed directly to CON3, one of two BNC output connectors on the front panel. The rest of the connections on CON1 are taken to the external breakout PCB at the back of the test rig.

As shown, pin 1 is connected to a +18V supply rail which is fed into the breakout PCB via CON5 (ie, from the external +18V plugpack). And pin 4 is connected to the +5V supply rail provided by REG1, a 7805 3-terminal voltage regulator which is fed from the plugpack via series zener diode ZD1.

ZD1 is used to drop the input voltage by about 6.8V so that REG1 doesn't dissipate too much power. The 12V cooling fan is powered from the +18V rail via a 47Ω 5W series dropping resistor.

There are two 'signal processing' circuits on the breakout PCB, both quite straightforward. One is a simple buffer using PNP transistor Q1 to drive LED1 as a LOCK indicator.

As shown, Q1's base is connected to pin 3 of CON1 via a 4.7kΩ resistor, so that the transistor is held off whenever the FE-5680A holds its LOCK-bar output high. Conversely, when it pulls this output low to indicate that it has locked, Q1 turns on and LED1 lights.

The remaining circuitry on the PCB involves IC1, a 74HC14 hex Schmitt

inverter. This is used as a buffer for the FE-5680A's 1pps output which appears at pin 6 of CON1 when the unit is locked (note: a buffer is needed because the FE-5680A's 1pps output has very little drive capability).

One of the six inverters is used at the input to minimise the loading and this then drives the five remaining Schmitt inverters in parallel to provide increased drive capability while also re-inverting the pulses. This double inversion inside IC1 does introduce a small propagation delay but this is no more than about 40ns, so it doesn't matter.

The output pulses from IC1b-IC1f are fed directly to CON2, the second BNC socket on the test rig's front panel.

So there it is: a simple test rig which can be used to bring a retired FE-5680A rubidium-vapour frequency and time standard back to life. By making some relatively minor changes (eg, to cater for different connector pin-outs), it could also be used to resurrect other rubidium vapour standards.

Building the breakout PCB

The breakout circuit is built on a PCB coded 04105141 and measuring 102 x 38.5mm. Fig.3 shows the assembly details.

No particular order need be followed when installing the parts on the PCB – just be sure to install the polarised parts with the correct orientation. It's a good idea to mount the 5W resistor slightly proud of the PCB, to allow the air to circulate beneath it for cooling.

Once the assembly is complete, it can be attached to the rear aluminium end panel using a couple of right-angle brackets. REG1's tab is then fastened to this panel using an M3 x 10mm machine screw, nut and lockwasher, to provide heatsinking. The fan is also fitted to this end panel (after making a matching cutout) so that it blows air across the FE-5680A rubidium standard mounted on the base.

The DE-9F connector and the two BNC output sockets go on the front plate of the test jig, as stated previously.

Tuning offset

As mentioned earlier, even when a rubidium-vapour standard like the FE-5680A warms up and 'locks to rubidium', its output frequency will not be *exactly* equal to 10MHz. That's because of the many complex parameters controlling the resonant frequency of the resonance cell – close to the theoretical figure of 6.834,682,612,8GHz but not exactly so. And the actual frequency also very drifts very slowly with time.

Because of this and regardless of whether the standard has been languishing unused on a shelf or running for many months, it's generally necessary to program the standard's internal frequency synthesiser. That's done to bring its output frequency as close as possible to the magic figure of 10,000,000.0000Hz.

With the FE-5680A and most other Rb-vapour standards made in the last 15 years or so, the internal frequency synthesiser is a DDS (direct digital synthesiser). As previously stated, this is programmed by sending an offset number to it from a PC via its RS232C port.

The offset is generally a 32-bit binary number, which is sent to the standard as a signed 32-bit integer

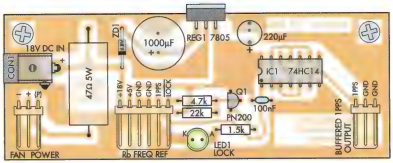

Fig.3: install the parts on the breakout PCB as shown here, taking care to ensure that all polarised parts are correctly orientated. Note that REG1's tab must be fastened to the metal end panel of the test jig for heatsinking.

Here's a closer view of the author's breakout board, mounted above the cooling fan on the rear plate of the test rig. REG1's mounting tab is screwed to the rear plate as well, to provide adequate heatsinking.

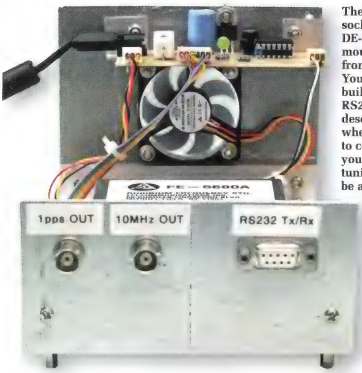

The two BNC sockets and the DE-9F socket are mounted on the front end-plate. You will need to build the USB/RS232C Interface described elsewhere in this issue to connect it to your PC so that the tuning offset can be adjusted.

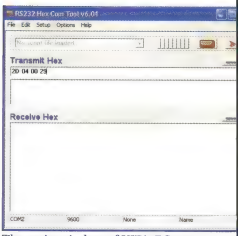

The main window of VID's RS-232 Hex Com Tool v6.01, a serial terminal application which runs under Windows but lets you transmit and receive data in hexadecimal – as you can see from the characters in the upper Transmit box. It's easy to set up and use to send commands to a rubidium standard like the FE-5680A.

(usually as eight hexadecimal digits), preceded by a short command. In the case of the FE-5680A, there are two commands to change the offset – one to do so temporarily and the other 'permanently' by saving the new offset in its EPROM.

As shown in the command table at the bottom of Fig.1, there's also a third command which allows the PC to request the FE-5680A's current offset figure.

The fact that the offset programming number is a signed 32-bit integer means that the number can have any hexadecimal value between 7FFFFFFF (= +2,147,483,647), through zero (00000000) and down to 80000000 (= -2,147,483,647). And since the significance of a single bit of the offset programming number is stated as 1.7854×10^{-7}Hz, this becomes the setting resolution.

In other words, the frequency offset can be programmed to any figure between +383Hz and -383Hz, in increments of 1.7854×10^{-7}Hz. That's a pretty good method of fine tuning, isn't it?

Of course, just how closely you'll be able to coax the output frequency to the ideal 10.000,000,0000MHz will depend mainly on the accuracy and resolution of your measurement set-up. If you can only measure down to 0.1Hz, that will be as close as you'll be able to go. It's a good example of the old adage that you need a really accurate clock to check another really accurate clock.

In my case, I was able to use the 12-Digit 2.5GHz Frequency Counter described in the December 2012 and January 2013 issues of SILICON CHIP. This can measure the frequency with a resolution down to 0.001Hz (1mHz) using the internal gating ranges and down to 0.0001Hz (100μHz) using an additional external ÷10 timebase divider (see the Circuit Notebook pages in this issue).

But this is only feasible because I also have a source of 1pps timebase pulses which have excellent accuracy and stability in both the short and long term: a Stanford Research Systems PRS10 Rubidium Standard, as shown on page 38 of the February 2014 article. I bought this a few months ago.

Because I'm now running it 'disciplined' by the GPS 1pps pulses from my GPS-Disciplined Frequency Standard (SILICON CHIP March-May 2007), its own 1pps output pulses (and 10MHz output) are accurate to within ±5 parts in 10^{-11}.

By using my 12-digit counter with this fancy external timebase set-up, I was ready to begin searching for the correct offset to program my FE-5680A, so that its output would move as close as possible to 10MHz (you may recall that when I first got it to lock, its frequency turned out to be 9,999,999.992Hz, ie, 8mHz low).

I had to do two things before this could be done, however. The first job was to make up a USB/RS232C

Issues Getting Dog-Eared?
Keep your copies of SILICON CHIP safe with these handy binders
Order now from www.siliconchip.com.au/Shop/4 or call (02) 9939 3295 and quote your credit card number or mail the handy order form in this issue. *See website for overseas prices.
REAL VALUE AT $14.95 PLUS P&P

Parts List

1 FE-5680A rubidium frequency standard (see text)
1 PCB, code 04105141, 102 x 38.5mm
1 12V cooling fan
2 DE-9F D-sub female sockets (CON1, CON4)
2 panel-mount BNC sockets (CON2, CON3)
1 2.5mm PC-mount DC power socket (CON5)
2 3-way right-angle locking (polarised) headers, PC-mount
2 3-way locking header plugs
1 6-way right-angle polarised pin header, PC-mount
1 6-way locking header plug
1 14-pin DIL IC socket
1 18V 2.5A plugpack supply
Aluminium panels and brackets to make test jig

Semiconductors

1 74HC14 hex Schmitt inverter (IC1)
1 PN200 PNP transistor (Q1)
1 7805 regulator (REG1)
1 6.8V 1W zener diode (ZD1)
1 green 5mm LED (LED1)

Capacitors

1 1000µF 25V electrolytic
1 220µF 10V electrolytic
1 100nF MKT ceramic

Resistors (0.25W, 1%)

1 22kΩ
1 1.5kΩ
1 4.7kΩ
1 47Ω 5W 10%

Miscellaneous

Machine screws, nuts & washers, hook-up wire, cable ties

Here's the 'tweaked offset' output frequency of the author's FE-5680A rubidium standard, captured on the 12-Digit 1GHz Frequency Counter using a home-brew time period divider to extend the gating time to 10,000 seconds. As you can see, the reading is 10,000,000.0000Hz, although the decimal point is not in the correct position.

DB-9 Or DE-9: Which Is Correct?

A "DE-9" D-sub 9-pin connector is often mistakenly referred to as a "DB-9" connector. The "E" refers to the shell size. A "DB-25" connector has a "B" size shell but the common 9-pin connector is smaller and has an "E" size shell.

This connector (regardless as to what you call it) is used for a variety of purposes. Two common applications are RS232/EIA-232 (serial) connections (including UPS cables) and a variety of video interfaces on the IBM PC.

interface so that I could hook up the FE-5680A to the PC that I was going to use, as my PRS10 standard was already connected to the PC's one and only legacy RS232C port. That's one of the reasons why I developed the USB/RS232C interface described elsewhere in this issue of SILICON CHIP.

Once that had been done, I then needed a 'serial terminal' program that would run on Windows XP SP3, communicate via a USB virtual COM port and preferably also allow me to send and receive messages in hexadecimal to make things easier (hex is a lot easier than straight binary).

After spending quite a bit of time downloading and trying out a number of freeware terminal programs, I finally settled on a program called 'RS232 Hex Com Tool v6.01', written by a firm called Virtual Integrated Design (VID). A free demo version of this can be downloaded from VID's website (see the links panel) but it closes down after about three minutes of operation and must be started up again if you want to use it for another three minutes – a bit irritating.

After you have used it for a short time, you'll probably want to purchase the full registered version. This is sold online for about $US40, via another firm called SWREG Inc (see the links panel again).

About the only thing that this terminal program doesn't do for you is work out the special 'exclusive OR checksum' that the FE-5680A needs after the data bytes are sent to it in the two change offset commands. Still, if you're only sending change offset commands with fairly small numbers (as we are here), it's not all that hard to work out the checksum yourself.

Doing it

At this stage, I was ready to try reprogramming my FE-5680A with an offset which would bring its output frequency as close as possible to 10MHz. First off, I hooked everything up and launched the RS232 Hex Com Tool program. Then I sent the FE-5680A the command to discover its current offset, as stored in its EEPROM. As you can see from Fig.1, this command is '2D 04 00 29' and it must be terminated in a carriage return (0D hex).

The FE-5680A immediately responded by sending back '2D 09 00 24 00 00 00 00 00', terminated in another carriage return (0D hex). This showed me that the offset currently stored in its EEPROM and being used to set the DDS was zero – ie, 00 00 00 00, with a data checksum at the end of 00.

So now I knew that this particular

Why Not Purchase A New Rubidium Standard?

A month or two before I wrote the article on rubidium standards for in the February 2014 issue of SILICON CHIP, I had made a decision to try to acquire one for my workshop. At that stage, I wasn't aware of the really low-cost surplus units available via eBay, so I searched around and came up with a short list of just two units that seemed to be just within my modest test gear budget: the Quartzlock E10-MRX (February, page 36) and the Stanford Research Systems PRS10 (February, page 38).

Both these units were available for less than $2300 including GST, so it was a matter of choosing between them. In the end, I decided in favour of the PRS10 because it was capable of being 'disciplined' by the 1pps pulses from a GPS receiver. The E10-MRX didn't seem to offer this feature and I wanted to be able to experiment along these lines to see if I could avoid having to send it away for calibration every year or two.

So I went ahead and ordered a PRS10 from the Stanford Research website, together with their small 'breakout board' which makes it easier to connect everything together. It arrived a few weeks later, complete with an operation and service manual in a neat 3-ring binder. Shortly after it turned up, I also bought a 24V/2.7A switchmode power supply (the PRS10 runs from 24V DC) and gave the PRS10 a quick 'test run' to see how it performed.

The results were so impressive that I immediately decided to build both the PRS10 and the power supply into an instrument case, together with a cooling fan at the back of the case and a small wideband distribution amplifier for the 10MHz output.

This PRS10-based frequency and time standard has been running for about three months now, disciplined by the 1pps pulses from my GPS Frequency Reference. Its own 'even more stable' 1pps pulses are being fed into the external timebase input on my 12-digit counter, to give it even better accuracy than when I was just using 1pps pulses from the GPS reference or Deluxe 1pps Time Receiver.

Handy Links

Frequency Electronics official FE-5680A product page:
http://www.freqelec.com/rb_osc_fe5680a.html

KO4BB's FAQ for the FE-5680A Rubidium Frequency Standard:
http://ko4bb.com/dokuwiki/doku.php?id=precision_timing:fe5680a_faq

Time Nuts mailing list archives:
http://www.febo.com/pipermail/timenuts/ and also at
http://www.mail-archive.com/time-nuts@febo.com/info.html

FE-5680A Series Option 2 Technical & Maintenance Instructions:
www.ka7oei.com/10_MHz_Rubidium_FE-5680A.html
www.guido_speer.de/Pub/images/Rubidium/5680A_TECH_MANUAL.pdf

Another good source for info on precise frequency & time:
http://leapsecond.com/

To download a free demo version of RS232 Hex Com Tool v6.0:
http://www.rs232pro.com/

To buy and download a full (registered) version of RS232 Hex Com Tool v6.0:
Either go to http://www.rs232pro.com/ and click on the 'registered' link, or go directly to https://usd.swreg.org/soft_shop/47653/shopscr6.shtml

Partial digital schematic (V0.3) of the FE-5680A:
http://www.rhodiatoce.com/pics/time-nuts/FE-5680A/FE-5680A_schematics_v0.3.pdf

FE-5680A, locked to rubidium and connected to my test rig, was providing an output of 9,999,999.992Hz with an offset of zero. That meant that I now had to try sending positive offset numbers to the FE-5680A to nudge its output frequency up by close to 0.008Hz, to reach the magic number of 10MHz.

This actually took longer than you might think, mainly because to get the measurement resolution, I had to have the counter set initially for a gating time of 1000 seconds (16.67 minutes). And that meant sending a new offset number and then waiting for just over half an hour (2 x 16.67 minutes) to see the result.

When I got close to the 'finish line', I then had to use the external timebase divider to give me a gating time of 10,000 seconds (2 hours and 47 minutes), to bring the counter resolution down to 100μHz. This now made for *really* slow progress because after sending a new offset number, I then had to wait nearly six hours to see the result. In short, you have to be patient when adjusting the offset!

After some trial and error, I was finally able to find the offset number (00 00 02 F8) which brought the FE-5680A's output frequency to 10,000,000.0000Hz – as you can see from the photo of the frequency counter. After that, it displayed this impressive figure for over a week – with just the occasional appearance of a '1' in the least significant digit.

Of course, most readers won't have a second rubidium standard to serve as a timebase for the frequency counter. In that case, the best approach is to use the 1pps signal from a GPS receiver, eg, the GPS 1pps Timebase described in February 2013 or the Deluxe GPS 1pps Timebase described in April 2013. These are sufficiently accurate over long time periods to do the job.

A final word

So that's the story of how I was finally able to get a low-cost 'retired' FE-5680A rubidium vapour standard going again and set up as a very useful frequency and time reference. It turned out that both units I purchased on-line were OK straight out of the box and there was no need to go though any of the tedious disassembly of the physics package or rejuvenation of the rubidium-vapour discharge lamp.

I don't know whether I was fortunate or whether this would normally be the case with used units, though. SC

YOUR CHOICE

That's what it's all about. . .

Now that the new SILICON CHIP website is up and running, your choices have never been wider when it comes to the way you subscribe. Subscriptions are available for 6, 12 and 24 months.

WANT TO SUBSCRIBE TO THE PRINT EDITION ONLY (as you've always done)? No worries!
WANT TO SUBSCRIBE TO THE ON-LINE EDITION ONLY (it's all new!)? No worries!
WANT TO SUBSCRIBE TO BOTH THE PRINT EDITION AND THE ON-LINE EDITION? No worries!

And that's what makes your choices even more valuable.
Say you're away from home when your printed copy is normally delivered. . .
Say you want to look up something# in SILICON CHIP from a previous issue when you're at work . . .
Say you want to search# for a particular project or feature from any issue. . .
No worries — even if you're on the other side of the world, you can read – in full – the current issue of SILICON CHIP with a desktop, laptop or notebook PC* – anywhere you can access the 'net.
And this convenience comes at a very small premium over the printed subscription price.

PLUS! While ever your subscription is current, you can download software, PCB patterns, front panel artwork, etc, FREE OF CHARGE!

Here's the deal:

 # Full access to articles requires subscription. Search facilities do not.
*** Must be capable of running Adobe Flash**

IF YOU'RE IN AUSTRALIA you can subscribe to the print edition (only) of **SILICON CHIP** for $105.00 for a full year – 12 issues (that's almost $15 less than the over-the-counter price – and we pay the postage!)
FROM ANYWHERE IN THE WORLD, you can subscribe to the on-line edition (only) of **SILICON CHIP** for $AU85.00 for 12 issues. (Of course, you can also subscribe to the printed edition outside Australia).
Or in Australia you can subscribe to BOTH the print edition AND the on-line edition, for the ultimate in versatility, for just $125.00 (yes, that's only $20 over the print edition subscription price). That's a very handy option for anyone who is travelling – read **SILICON CHIP** online from anywhere in the world!
You can also convert from a printed edition or on-line edition to a combined edition if you wish.
There are many other options available, such as shorter or longer subscription (eg, 6 and 24 months), New Zealand/other overseas offers, subs with binders (Australia only) and so on.
There are far too many to list here – they're fully explained on the "subscriptions" page on the website:

www.siliconchip.com.au

ALTRONICS

Build It Yourself Electronics Centre

Issue: April 2014

Top Easter Deals

Latest Quad Core Arm Cortex A9 CPU

4.2

$159 NEW!

D 2811

Turn your 'dumb telly' into a smart telly!

Smart TVs are all the rage - allowing you to stream movies, music and photos to your big screen, plus access an array of smart phone style games & apps. Simply plugs into a spare HDMI input. Streams 1080p HD video over wireless connection. 1GB of RAM, 4GB internal memory & micro SD slot.

$74.95 NEW!

Great sound from such a small device - only 125mm tall.

D 2030

It's a phone charger! It's an FM radio! It's a Bluetooth® speaker!

It's all of the above! The Dynalink Pocket Jukebox is an ingenious combination of devices designed to playback your digital music library wirelessly. A handy 2200mAH battery bank keeps your phone charged up when you're out and about.

Portable & digital ready!

A 2752

$69 SAVE $30

Listen To Digital Radio On The Go!

Great for listening to cricket commentary at the game. Or access the huge variety of new digital stations on offer. Jog wheel tuning with 10 presets & headphone socket. Requires 4xAA batteries (pick some up in-store!).

$28.50 NEW!

Use it at home too!

A 0309A

Powertran® 4 x USB Multi Travel Adaptor

Enough ports for all your portable devices! 2.1A max current shared between 4 USB ports. Includes adaptors for Australian, US, UK and European outlets. 100-240V ac.

Inspect A Gadget

High Luminance LED Magnifying Lamps

Ultra-bright long life LED for fantastic clarity (plus no need to change a globe - EVER!!). Let "gadget" be your eyes. Identify those impossible to read miniature components. Great for stamp & coin collectors; model makers; jewellers etc. Fully adjustable ball joint head.

NO MORE EYE STRAIN!

X 4204 3 Dioptre $49.95 TOP VALUE

X 4205 5 Dioptre $55.95 TOP VALUE

Tip has inbuilt LED lamp.

$27.95 NEW!

T 2699

Amazing USB Powered Soldering Iron!

This lightweight unit is perfect for occasional soldering jobs with surprisingly good performance. Includes adaptor for running from a 9V battery and sponge. Fitted with ultrafine tip capable of temperatures up to 896°C! **Check out the YouTube video online.**

A must have for the servicing workbench

Q 1520

$239 SAVE $60

UNI-T™ True RMS Benchtop DMM Datalogger

Ideal for service departments & circuit development. Provides true RMS measurement & datalogging. 240V or battery powered (6 x C Cells). • Inbuilt stand/handle • 10A AC/DC • Freq. to 50MHz • Temp -40°C to 1000°C • Software, temp probe, PC USB/serial leads included • 2 year warranty.

Power Up Your Easter Holiday

Car/240V Laptop Power Supply

A laptop power supply designed for both 240V mains and portable 12V use. Includes car power adaptor, mains lead and 12 tips to suit popular models of laptop. 14.5 to 24V output @ 90W max.

M 8990

$79.95 SAVE $20

Works at home or on the road!

Surge protected outlets!

M 8893

$21.95 NEW!

$24.95 NEW!

M 8894

High Current 3.5A Dual USB Mains Charger

With pass through 240V socket so you don't lose an outlet! Great for keeping your phone & tablet charged. Mains surge circuitry protects your appliances from damaging power fluctuations.

A 0276

Use at home or in the car!

$39 SAVE 26%

Charge Up To 12 Batteries At Once

10 x AA/AAA and 2 x 9V rechargeable overnight battery charger. Keeps plenty of batteries charged for the kids toys! Includes plugpack & car socket adaptor.

S 4746F 4pk AA

2 Packs for $36 SAVE 16%

S 4742D 2pk AAA

2 Packs for $10 SAVE 25%

Quality NiMH Rechargeable Batteries

These batteries offer excellent performance in high power devices. Recharge up to 1000 times, pay for themselves in just a few uses!

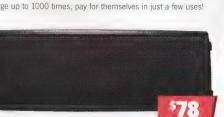

N 0706

$78 SAVE 14%

15W Portable Solar Panel Charger

Provides up to 1A charge current for keeping car, caravan or 4WD batteries topped up. Ideal for portable situations where temporary charging might be needed, such as campsites. Includes croc clips and car accessory plug. Size: 977Lx342Wx22Dmm.

Phone Order Now On...

1300 797 007

or shop online 24/7 at www.altronics.com.au

Our Build It Yourself Electronics Centres...

» **Springvale VIC:** 891 Princes Hwy » **Auburn NSW:** 15 Short St » **Perth WA:** 174 Roe St
» **Balcatta WA:** 7/58 Erindale Rd » **Cannington WA:** 6/1326 Albany Hwy

Workbench Deals

DeoxIT® D5 Spray
The ultimat electronics service aid. Dissolves corrosion, improves contacts and protects surfaces. Great for cleaning battery terminals.

$29.95 NEW!

New larger can!

T 3063 142gm

Great for automotive wiring.

$17.95 SAVE 14%

W 0884 Colour
W 0886 Black

Handy 160 Piece Heatshrink Packs
A must have for the workbench! 160pc's of 100mm heatshrink in 1.6, 2.4, 3.2, 4.8, 6.4 & 9.5mm sizes.

New adhesive backed pack

$29.95 NEW!

W 0888 Black

Glue Backed Heatshrink Pack
Great for sealing out dust and moisture. 106pc's of 100mm heatshrink in 1.6, 2.4, 3.2, 4.8, 6.4 & 9.5mm sizes.

$12 SAVE 20%

Z 0004 3mm Z 0002 5mm

Assorted 100pc LED Packs
Stock up on handy LED's in red, green and yellow. Quantity of each colour may vary.

Ideal for field servicing

T 5036

$25 SAVE 15%

Double Sided Parts Case
Nifty parts case with adjustable dividers for up to 15 compartments on one side, plus 10 removeable containers on the other.

Our most popular cutters!

T 2748

$16 SAVE 15%

5" Carbon Steel Side Cutters
Tough carbon steel blades, stay sharp longer. Ideal for cutting solid core wires.

Great Value Security for Home or Business

NEW 8 CHANNEL 960H PACKAGES!

S 9907 pictured.

Just add a hard drive and go!

$999 NEW!

Install your own CCTV system and save a fortune!
Great size for a small business or family home. Simply add a hard drive (see right) and plug it in! Each pack includes: • 8 channel H.264 digital video recorder • 8 pro grade 960H resolution cameras • 8 x 20m BNC & power combo leads • Power splitter lead • Power supply • Easy to follow instructions. **S 9905 includes 8 x weatherproof dome cameras. S 9906 includes 8 x weatherproof bullet cameras. S 9907 includes 4 x bullet cameras & 4 x dome cameras.**

8 Channel H.264 960H recording | Weatherproof cameras | Live smartphone viewing | Motion triggering

Seagate® Hard Drives To Suit

D 5513A	1TB	**$108**
D 5515	2TB	**$149**

$129 NEW!

New upgraded model!

S 9134B

0 lux | 650 line resolution | 2.8-12mm focal adj.

Vari-Focal Outdoor IR Camera
Offers all metal construction for great long term outdoor use. IP66 rated with vari-focal lens and 40m IR illumination. 12V DC input

$115 NEW!

S 9121B

0 lux | 650 line resolution | 3-axis adjustment

Vandal Resistant IR Dome Camera
All metal construction for great long term outdoor use. IP66 rated with vari-focal lens and 30m IR illumination. 12V DC input

$75 NEW!

New upgraded model!

S 9115D

0 Lux | 960H 16:9 Resolution | 20m IR Range

Vandal Resistant IR 960H Camera
Features a Sony CMOS 800 line sensor. Tough diecast enclosure. Low noise picture. M 9272B plugpack to suit $17.95.

$40 SAVE $15

S 9394

Security Doorphone System
Added peace of mind for your family. Connects via two core cable (25m included) for easy installation. It can even be used to open a door strike as part of a secure entry system for home or business. Includes power supplies.

$22 SAVE 25%

S 5320

Mini PIR Door Minder & Alarm
Excellent unit for use in home, office & shops. Works in 2 modes, as an entry or exit chime or as an alarm when triggered by the PIR movement sensor. 10m range. Requires 9V battery or M 9237B plugpack $17.95.

$44 SAVE 20%

Q 1270

Great for CCTV installation

Measure Light Levels Instantly!
Checking light levels is an essential part of selecting the right CCTV camera. High precision sensor provides instant, accurate lux readings. Includes protective case.

S 9753B

Power all your cameras from the one loc!

$109 SAVE $20

9 Output CCTV Power Supply
A central CCTV power supply providing 9 x 12VDC outputs, each at 500mA. Individually fused. Plugs into a standard mains outlet (includes lead). Size: 203W x 203H x 54Dmm.

$50 SAVE 20%

S 5373

RFID Keyless Access Pad
Can be set up to require both RFID & keypad access or RFID only. 3 relay outputs; 2 x 3A NC/NO for door strike/alarm triggering, 1A aux relay. Waterproof case. S 5376 RFID tags $9.1Sea. 129Hx84Wx41Dmm.

Camera Hook Up Leads

Power & video in one lead!

Extends audio (RCA), video (BNC) and DC (2.1mm) power connections up to 20m. All in one solution.

Length	Model	RRP	Now...
5m	P 6709	$19.95	$16
10m	P 6711	$24.95	$21
15m	P 6712	$29.95	$23
20m	P 6713	$34.95	$27

Stock up the tool box!

Iroda® 100 Watt Handyman Gas Tool
Cordless Do-Anywhere Soldering Iron & Blow Torch. One-click piezo ignition. 2 hours use from a full tank! T 2599 Kit Includes:
• Blow torch tip • Hot knife tip • Hot air tip • Solder • Sponge • Carry case
• T 2451 gas to suit $7.50.

$59 SAVE $20 — T 2598 Iron Only
$89 SAVE $10 — T 2599 Full Kit

Add drawer dividers for $4.95 pk/20

$29 SAVE 25% — H 0237 Small
$44 SAVE 15% — H 0239 Large

See-Through Parts Storage
Great way to tidy up your work bench - with room for all your parts, test leads, nicknacks and doohickeys! **H 0237:** 347W x 142D x 187Hmm. **H 0239:** 447W x 180D x 246Hmm.

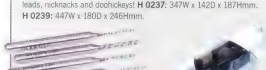

T 2320A 0.8mm
T 2321A 1mm
T 2322A 1.2mm
T 2323A 1.5mm
4 for $15 BARGAIN

New & Improved PCB Drills
High speed tungsten carbide drill bits with thickened shaft for reduced flex.

T 2488
$15.95 SAVE 11%

Mini Keyring Jet Blowtorch
Produces a powerful jet like flame - up to 1300°C! • Great for hobbyists • Adjustable flame • Refillable • One click ignition • Diecast case

T 1526 1-3.2mm²
T 1527 0.5-2mm²
$18 SAVE 20%

E-Z Squeeze Wire Strippers
Instant wire stripping with a squeeze of your hand. Jaws have holes to suit various wire sizes.

T 1480
$11.95 BARGAIN

Squeezy Blow Brush
Great for quick removal of dust and debris from inside equipment & keyboards. Supplied fine point & brush nozzles.

$9.95 TOP VALUE — T 2191

Stubby Ratchet Driver
A must have for the glovebox or kitchen drawer! This little driver houses 7 bits, ready when you need it. *Colour may vary.

$8.95 BARGAIN — T 1470

14x Mini Magnifier
Get a close up view! Great for PCB track inspection.

Pay less for top quality tools & test gear!

Protek® True RMS Datalogger
The full house multimeter, packed with features and value! Excellent for research, design & service.
• Dual display with bargraph • Logic test
• Decibel capacitance, inductance & temperature
• Pulse signal injection
• MIN, MAX, AVG & relative modes • Continuity & diode test • Fused 20A input • Data hold & run.

$139 SAVE $40 — Q 1098
An Altronics Best Seller!

$339 SAVE $40 — T 1285
4 popular tips included.

Micron® 600W Hot Air SMD Re-Work Station
A commercial grade unit at an affordable price!
Provides a quick and easy way to rework boards fitted with surface mount devices, even in RoHS products. It works by blowing 600 watts of heated air onto the board your are working on, melting the solder on the SMD pads.

40L per minute air pump	Four blower tips	2 year warranty

T 1295
FREE! Spare filter inserts valued at $13.60
$99 TOP DEAL!

Whisk Away Soldering Fumes
Tired of coughing on soldering fumes when soldering? This come extractor whisks away smoke & filters the air. All metal construction.

$129 SAVE $30 — M 8261 9-15V 20A
$149 SAVE $50 — M 8263 9-15V 30A
High efficiency switchmode design

Powertran® Analog Lab Power Supplies
These compact, fan cooled, switchmode power supplies deliver up to a huge 30A regulated output, adjustable between 9 and 15V. Plus fixed 13.8V setting. Ideal for comms equipment or servicing. Low noise design. 85% efficiency. 155x70x205mm.

Ideal for checking response of audio circuits.
$269 SAVE $30 — Q 1562

Professional Grade Function Generator
Operates as a standard waveform generator with sinusoidal, triangle and square wave outputs. DC offset and symmetry. Adjustable output between 0.03Hz & 3MHz. Plus a 3 MHz counter. Size: 251W x 291D x 91Hmm.

9pc 1000V Rated Insulated Tool Kit
Great for electricians, technicians or anyone working on mains equipment! Includes cutters, pliers, wire strippers, 240V test driver, 5 screwdrivers, and 2 rolls of tape.
Includes handy carry case!
$45 SAVE 24% — T 2175

$145 SAVE $30 — Q 1286

Contact Free Digital Thermometer
With twin laser guided beam for pin point accuracy! Lightweight, "point and shoot" long distance temperature measurement. Ideal for measurement in dangerous places, or when equipment is operating. Incredible accuracy from -50°C to 1000°C. 30:1 optical resolution. 150ms response. 1% accuracy. Includes battery.

2 Year Warranty. — Q 1536
$169 SAVE $30

High Accuracy 2.7GHz Frequency Counter
Covering a range of 10Hz to 2.7GHz in two ranges; 10Hz to 100MHz and 100MHz to 2.7GHz. Ideal for servicing and calibrating RF equipment, radio mics, CB's & transceivers. Period, frequency, pulse count (totalise) functions. x20 input.

ALTRONICS
BUILD IT YOURSELF ELECTRONICS CENTRE

Our Build It Yourself Electronics Centres...

» **Balcatta WA:** 7/58 Erindale Rd » **Cannington WA:** 6/ 1326 Albany Hwy
» **Perth WA:** 174 Roe St » **Auburn NSW:** 15 Short St » **Springvale VIC:** 891 Princes Hwy

Educational Electronic Kits @ Great Prices

BACK IN STOCK: Altronics new range of spring terminal electronic project labs for ages 10+

These simple kits are a great introduction to the world of electronics. Basic principles are covered and assembly is completely solderless using a series of spring loaded terminals to create a circuit. Detailed instructions show the wiring and explain the principle used in each project.

Believe it or not, these kits are how many of todays engineers got started in the 80's!

K 2222

300 in 1 Electronics Lab

The 'Rolls-Royce' model with all the bells and whistles. Teaches you about electronics from A to Z. You will learn about electronic parts, how to read schematics, and wiring diagrams. All this, while building up to 300 different projects. Requires 6 x AA batteries.

K 2200

10 in 1 Electronics Lab

10 exciting projects including a morse code generator, burglar alarm and a radio. Requires 9V battery.

K 2216

'Crystal Set' Radio Kit

Build your own AM radio - no soldering required. A crystal set was one of the first educational kits available in the 60's and is still going strong today! A great intro to electronics with a bit of nostalgia too. No power required!

K 2208

130 in 1 Electronics Lab

A comprehensive learning lab with many hours of building an experimenting. Build a radio, AM broadcast station, electronic organ, kitchen timer, logic circuits and many more. Requires 6 x AA batteries.

K 2204

30 in 1 Electronics Lab

Contains everything you need to build a range of electronic projects to encourage learning about essential principles. Requires 2 x AA batteries.

K 2212

AM/FM Radio Kit

A make-it-yourself AM/FM band radio which requires no soldering or special tools. Requires 9V battery.

K 2220

Digital Recording Laboratory

Assemble up to 50 educational and fun experiments using advanced Integrated Circuit Technology. You'll learn all about digital sound, voice recording and modulation. Requires 3 x AA batteries.

K 1122

Salt Water Powered Buggy Kit

A V8 powered buggy that runs on salt water! No batteries required. This kit features a detailed engine with moving cylinders and crank shaft. Ages 8+.

K 1117

PC Birdies Kit

(SC Aug '13) An educational and fun kit to build for electronics beginners. Re-creates the sound of a tweeting Canary at random intervals. Includes Jiffy box case.

K 1080

The Mighty Titan Battle Tank Kit

Battle eachother around the lounge room! This fantastic do-it-yourself kit comes with all the parts to build a 6 wheel drive battle tank and controller. It's made to be easy enough for kids to build (ages 6+) and can be constructed in just an hour or two. Requires 4 x AAA & 4 x AA batteries.

K 1115

'Follow Me' Robot Kit

Uses four inbuilt microphones to detect sound (such as a hand clap) and moves toward it. Ages 8+. No soldering required. Requires 4 x AAA batteries (not included).

K 1128

Electronic Bellbird Kit

(SC Dec '13) A great starter project for kits to learn about electronics. Mimics the musical sounds of a real Bellbird with a decorative LED chaser light. Includes button cell battery.

Sale Ends April 30th 2014

Altronics Phone 1300 797 007 Fax 1300 789 777

Mail Orders: C/ P.O. Box 8350 Perth Business Centre, W.A. 6849

© Altronics 2014. E&OE. Prices stated herein are only valid for the current month or until stocks run out. All prices include GST and exclude freight and insurance. See latest catalogue for freight rates. All major credit cards accepted.

Please Note: Resellers have to pay the cost of freight and insurance and therefore this page purchased products, which are charged at individual reseller rates vary from our catalogue.

Resellers

WESTERN AUSTRALIA		
Esperance	Esperance Comms.	(08) 9071 3344
Geraldton	ML Communications	(08) 9965 7555
VICTORIA		
Bairnsdale	Bairnsdale Electrics	(03) 5152 3201
Beaconsfield	Electronic Connections	(03) 9768 9420
Bendigo	Interact Us	(03) 5444 3000
Castlemaine	Top End Technology	(03) 5472 1700
Clayton	Rockby Electronics	(03) 9562 8559
Cranbourne	Bourne Electronics	(03) 5996 2755
Croydon	Truscott's Electronic World	(03) 9723 3860
Geelong	Music Workshop	(03) 5221 5844
Healesville	Amazon DVDs Healesville	(03) 5962 2763
Hoppers Crossing	Leading Edge	(03) 9931 0845
Leongatha	Gardner Electronics	(03) 5662 3891
Nunawading	Semtronics	(03) 9873 3555
Preston	Preston Electronics	(03) 9484 0191
Rosebud	AV2PC	(03) 5986 6711
San Remo	Shorelec Elec. Wholesale	(03) 5678 5361
Somerville	AV2PC	(03) 5978 0007
Wodonga	Exact Comp. & Home Ent.	(02) 6056 5746
TASMANIA		
Hobart	Active Electronics	(03) 6231 0111
Launceston	Active Electronics	(03) 6334 7333
QUEENSLAND		
Bowen Hills	Prime Electronics	(07) 3252 7466
Caloundra	LESC	1300 716 840
Cloncurry	Access Electronics	(07) 4742 2590
Coorparoo	Delsound	(07) 3397 8155
Fortitude Valley	Design Data	(07) 3854 1588
Gold Coast	Prime Electronics	(07) 5531 2599
Hervey Bay	Ultra Music	(07) 4128 2037
Innisfail	Leading Edge Electronics	(07) 4061 6214
Longreach	Access Electronics	(07) 4658 0500
Rockhampton	Access Electronics	(07) 4922 1058
Toowoomba	Michael's Electronics	(07) 4632 9990
Townsville	SOLEX	(07) 4771 4211
NEW SOUTH WALES		
Brookvale	Brookvale Electrical Dist.	(02) 9938 4299
Cessnock	Leading Edge Electronics	(02) 4990 5971
Cobar	Cobar Electronics	(02) 6836 2962
Deniliquin	Wired Entertainment	(03) 5881 3555
Gloucester	Autolec Gloucester	(02) 6558 1600
Grafton	Downies Electronics	(02) 6642 1911
Griffith	Griffith Systems Plus	(02) 6964 5933
Gunnedah	Protronics	(02) 6742 2110
Lithgow	Leading Edge Electronics	(02) 6352 3333
Nth Richmond	Candle Power Tech.	(02) 4571 4699
Oak Flats	Oak Flats Electronics	(02) 4256 6120
Orange	Fordray Electronics	(02) 6362 9901
Penrith	Penrith Light and Sound	(02) 4733 3333
Port Macquarie	Feltel Comms.	(02) 6581 1341
Smithfield	Chemtronics	(02) 9609 7218
Tamworth	Bourke Street Electronics	(02) 6766 4664
Taree	Noeledge Systems Pty Ltd	(02) 6551 3622
Wagga Wagga	Wagga Car Radio	(02) 6925 6111
Waterloo	Herkes Electrical Supplies	(02) 9319 3133
Wetherill Park	Techtron Electronics	(02) 9604 9710
Windaroo	Mad Electronics	(02) 4297 7373
Wollongong	Lightsounds Wollongong	(02) 4226 1177
Wyong	Coastal Caravan And RV	(02) 4353 1100
SOUTH AUSTRALIA		
Adelaide	Actronics	(08) 8212 6212
Brighton	Force Electronics	(08) 8377 0512
Enfield	Actronics	(08) 8349 6340
Findon	Force Electronics	(08) 8347 1188
Kadina	Idyll Hours Hobbies	(08) 8821 2662
Mount Barker	Home of 12 Volt	(08) 8391 3121
NORTHERN TERRITORY		
Darwin	Combined Comm. Solutions	(08) 8942 0644
NEW ZEALAND		
Christchurch - Riccarton	Global PC	+64 3 3434475
Christchurch - Shirley	Global PC	+64 3 3543333

PRODUCT SHOWCASE

See-Through Window UHF TV Antenna

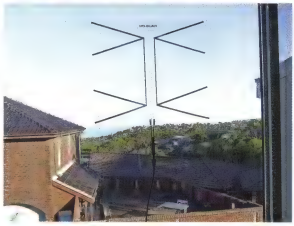

If you're in a reasonably strong UHF signal area this new "roll-up" TV antenna from HD-Quad could solve a number of TV antenna problems – especially if you're renting or perhaps you don't want to go to the trouble and expense of erecting an external antenna.

The HD-Quad is a two-bay UHF phased array which simply sticks to a window, facing in the general direction of the TV transmitter.

The backing laminate film is completely transparent – it won't block your view at all – and the antenna "elements", made of conductive silver ink traces, are hardly noticeable. Because it's so thin, operation of sliding windows, blinds, etc are virtually unaffected.

The antenna is A3 in size and weighs in at a miserly 100g. While it naturally lends itself to horizontal polarity, it could be mounted vertically for vertically polarised signals. However, we have to say that when we tried it out, there was no discernable difference in signal when mounted horizontally and aimed at a vertically-polarised translator.

It will cover UHF channels from 28-69; however, when the digital TV restack is completed this year you will only need to cover from 28 to 51 (channels 52-69 will all disappear).

A short (50mm) lead is attached to the antenna with female PAL connector for plugging into a standard TV coax extension lead-in. This (and the lead-in) should be secured in their own right to prevent the weight eventually dragging the antenna free.

In use

We tried the HD-Quad in two locations – one with line-of-sight coverage from North Head translator (at about 10km) and the other in a known TV black spot, where coverage is normally only available from the Bouddi translator (at about 50km) using a high-gain outside antenna, mounted high off the ground, and definitely assisted by a masthead amplifier.

In the first location, the picture was rock-solid on all channels (now, of course, digital). In fact, there was even a good picture received from the off-axis (about 90°) Kings Cross translator (at about 15km) on all channels. We would highly recommend this antenna for good UHF signal areas.

The second location was, as we expected, not so good. In fact, the only channels we were able to receive was the SBS suite – 1, 2, 3 and HD. Even then, there was pixellation and drop-outs. But having said that, we were surprised it did that well! It is the only "indoor" antenna we've ever tried in that location that received *anything*! The HD-Quad is definitely not designed for such poor signal strengths.

At $39.99, the HD-Quad won't break the bank – especially as you have nothing else to buy (except a lead-in, perhaps). It's simply a matter of fixing it to the window (tabs are supplied), plugging it in and away she goes!

HD-Quad also have a similar but larger (A2 size) model, capable of receiving both VHF and UHF signals. Again, after the restack is finished, you probably won't need to be able to receive both (however, there are exceptions in very few areas).

Contact:
HD Quad
224 Lidco St, Arndell Park NSW 2148
Tel: (02) 9831-5733
Website: www.hd-quad.com

Data Acquisition Module from Ocean Controls

The LabJack T7 Pro is a fully featured USB, Ethernet and Wi-Fi based multi-function data acquisition module. The module can be powered either via the USB port or an external 5V power supply (included in the packet).

It features high data acquisition rates together with a high resolution ADC and has Modbus TCP protocol compatibility. It also supports a pile of different programming languages, making it one of LabJack's most flexible modules. The software layer is fully cross-platform; the end user isn't forced into a specific programming language.

Some of the supported programming languages include; C++, MATLAB, Java, Visual Basic and LabView.

Contact:
Ocean Controls
3/24 Wise Ave, Seaford, Vic 3198.
Tel: (03) 9782 5882 **Fax:** (03) 9782 5517
Website: www.oceancontrols.net

New TekMark Website

TekMark Australia, a leader in supply and distribution of electronics test, measurement and monitoring solutions, has launched their new website at www.tekmark.com.au

It offers some new features including:

On-line purchasing of selected products
Create your personal account with secure log-in
Product highlights
Latest promotions
New arrivals
And much more!

Contact:
TekMark Australia
302/3 18-20 Orion Road, Lane Cove NSW 2066
Tel: 1300 811 355
Website: www.tekmark.com.au

"Spectacular value": Six Instruments for $795+ GST

The WENS 540 Digital Debug Meter combines 6 instruments in one hand-held package:

- a Graphical 50,000 count DMM
- a 10MHz Oscilloscope with 50MS/s including pulse-width trigger and 20nS peak-detect oscilloscope,
- Signal source,
- a 50MHz/Ch sampling logic analyser,
- a Serial Protocol Analyser with trigger for common serial data formats and
- a Digital Pattern Generator for serial data simulation, all in one hand-held unit.

The bright back-lit display shows the user everything from oscilloscope waveforms to serial bus analysis to eight logic channels. Plus all the usual DMM functions are standard plus extras such as dBm readout. It also has a data-logging function with trend-analysis. Data and screen images can be downloaded to a PC using the standard USB interface. Optional external sensors with mV outputs for temperature, pressure, humidity and current are also supported with readings scaled in the appropriate units. These can also be logged.

Contact:
Trio Test & Measurement
35/ 9 Salisbury Rd, Castle Hill NSW 2154
Tel: (1300) 853 407
Website: www.triotest.com.au

element14 Starts a RIoT

element14 has exclusively launched an open source, single board platform, the Revolutionizing the Internet of Things (RIoT) board, designed to run Android operating systems efficiently. It features a high performance/ low-power consumption processor with a broad range of peripherals and display capabilities, making it perfectly suited as a hub for the Internet of Things (IoT).

The board is ideal for Android and Linux development and is based on the Freescale i.MX 6Solo processor,using the ARM Cortex-A9 architecture.

The RIoTboard platform includes a rich set of peripherals including a 10M/100M/Gb Ethernet port, a USB 2.0 OTG High Speed and four USB 2.0 High Speed 2.0 Hosts, LVDS, HDMI and Parallel RGB interfaces, micro TF and SD card interfaces, analog headphone/microphone jacks, camera interface, serial ports, JTAG and boot configuration interfaces.

Key applications for the board will include vertical/ industrial/educational tablets, smart home appliances, medical – patient monitoring and telehealth, factory automation and HMI, digital signage, point-of-sale equipment, IP phones, scanners and smart metering.

The RIoTboard is priced at AUS84.36, exclusively from element14.

Contact:
element14 Pty Ltd
72 Ferndell St, Chester Hill NSW 2162
Tel: (02) 9644 7722 **Fax:** (02) 9645 1381
Website: www.au.element14.com

Weller W Series Magnastat Controlled Output Soldering Tools

Looking for a simple to operate, efficient and versatile soldering tool? The 60W Weller W60D and the 100W W100D are simple and compact – in fact smaller than the non-controlled soldering tools of the same power rating and plug directly into a regular power outlet without the need for any kind of control box. Both are manufactured and assembled in Australia at the Apex Tool Group, Albury facility.

The temperature is controlled using the Weller-patented Magnastat system, which uses the "Curie point" of a piece of magnetic material attached to the soldering tip to operate a switch similar to a reed switch. The tool heats until the Curie point of the magnetic material is reached, whereupon the magnetic field collapses and the switch switches off. When the tip has cooled to below the Curie point, the magnetic field is re-established and the switch switches on, thus the cycle continues and the temperature is controlled within the on and off points of the cycle.

The soldering tips for all Weller W-Series tools are Iron plated which gives significantly longer tip life when compared to unplated tips. The tips are earthed to help prevent static damage.

The W60D is a particularly versatile tool as it is eminently suitable for quite fine electronic work with some tips available down to 1.6mm but can also handle heavier cable using 6.4mm tips.

Temperature control ensures that the specific heat, as required for the job, is supplied to the tool without any input required from the operator. Another advantage is that the tool does not overheat causing potential damage to components or circuit boards. The lower temperature also improves the life of the soldering tips.

The W100D is somewhat larger and is particularly suitable for stained glass work where overheating is a common problem due to working with low melting point lead came strips between the pieces of glass.

It is also suitable for quite heavy cable work, with tips up to 9.5mm.

Contact:
Apex Tool Group
519 Nurigong St, Albury NSW 2640
Tel: (02) 6058 0300 **Fax:** (02) 6021 7403
Website: www.apextoolgroup.com.au

SCHÜTZINGER Now available in Australia through Enertel

The name Schützinger stands for a diversified range of products and services — and for good connections.

After its founding in 1950, Schützinger quickly made a name for itself with its range of electrical plug connections for measurement and testing labs.By taking on a series of representations for well-known German companies from the electrical engineering and electronics sector, Schützinger was able to continually build on its expertise on the market.

Today Schützinger is not just a supplier of a wide range of standard products in measurement technology; it also manufactures electrical connectors tailored to customer requirements in the areas of education/training, electrical manufacturing, building technology, lighting and fire-proofing. sc

Contact:
Enertel Pty Ltd
PO Box 784. Winston Hills NSW 2153
Tel: (02) 9674 4748
Website: www.enertel.com.au

Vintage Radio

By Dr Hugo Holden

Made in New Zealand: the Pacemaker transistor radio

. . . plus a look at mixers, RF stages & image rejection

A vital part of any AM superhet transistor radio is the mixer or mixer-oscillator and this month we take a look at how these circuits work. We also describe the New Zealand-made Pacemaker Transportable radio and compare its main features with the Sony TR-72 described last month.

THE NZ-MADE Pacemaker is credited as being one of the world's first commercial transistor radios to have a tuned RF amplifier stage. In fact, it may well have been the very first.

Most transistor radios of the mid 1950s (for example the 1954 Regency TR1 and the 1956 Sony TR-72) did not have an active tuned RF (radio-frequency) front-end. Indeed, most medium-wave (ie, broadcast-band) radios didn't have active RF stages right through into the 1970s. By contrast, shortwave radios often did.

But why was this and what are the advantages of an active tuned RF stage?

Nearly all transistor radios employ an "autodyne" mixer or "converter" circuit. This is a combined mixer-oscillator circuit and is sometimes called an 'additive mixer'. However, this is misleading because the mixing process involves multiplication of the incoming signal with the oscillator signal, not addition.

The fundamental principle of the superheterodyne (or superhet) radio involves frequency conversion. This is done by converting the received signal frequency down to a lower frequency called the 'intermediate frequency' or IF. This is why mixers are sometimes also called 'converters'.

In typical transistor radios, the IF is nominally 455kHz. The following IF amplifier stage is usually composed of two transistors and three IF transformers but some radios, such as the Pacemaker, only have one IF transistor and two IF transformers.

Most of a transistor radio's signal gain and selectivity is in the IF amplifier. While the IF transformers are tuned to a centre frequency of 455kHz, their bandwidth is still wide enough to pass audio frequencies through to the detector. This bandwidth is typically between ±3kHz and ±5kHz.

The preceding converter stage usually takes one of two forms: either a mixer transistor with a separate oscillator transistor feeding it or, more commonly, a single-transistor oscillator which also acts as a mixer. The latter is commonly referred to as a 'mixer-oscillator'.

When the received (ie, tuned) signal is 'mixed' with the oscillator signal, sum and difference components of the two signal frequencies appear in the mixer's output. So if a received signal frequency of 650kHz is mixed with an oscillator signal frequency of 1105kHz, the sum and difference frequencies will be 1755kHz and 455kHz respectively. However, only the 455kHz signal passes through the IF amplifier due to the IF transformer tuning.

Fig.1 shows the basic configuration of a superhet receiver and gives some example frequencies. In operation, the oscillator frequency is set so that

it always runs 455kHz (ie, the IF) higher than the incoming tuned signal frequency. That's done by simultaneously tuning the antenna circuit and the oscillator using a 2-gang variable capacitor, so that the oscillator signal tracks 455kHz above the received frequencies.

Of course, this tracking is never absolutely perfect and there are tracking errors. However, with good design, these errors are virtually zero at the extremities of the band and in the centre.

As shown on Fig.1, there is another frequency known as the 'image frequency' that could also be accepted by the IF stage. This image frequency (or potential interfering radio station) will have a lower signal level than the wanted signal because the antenna coil is tuned to the wanted signal. However, if the image frequency signal is strong enough, it could break through.

As stated, the IF amplifier passes only 455kHz signals and rejects all other signals. The problem is that the "image" frequency is 2 x 455kHz = 910kHz above the tuned frequency, or 455kHz above the oscillator. As a result, the mixer/oscillator also converts it to 455kHz (ie, the difference product) and so it is at risk of breaking through.

Fortunately, image frequencies above 790kHz are outside the AM broadcast (MW) band and there are few (if any) stations transmitting in the region from 1700-2500kHz to cause image problems. However, that's not the case on the shortwave bands where it's not uncommon for another station to be transmitting 910kHz above the tuned frequency.

One solution to the image problem is to have a tuned "preselector" or RF stage consisting of an extra transistor and tuned circuit prior to the mixer. This stage helps to boost the wanted frequency and attenuate other frequencies further away (such as the image frequency).

Basically, it improves the selectivity and provides additional gain to improve sensitivity (ie, to boost low-signal reception). It also increases the signal level fed to the mixer, potentially helping to lower the noise generated in the mixer itself. This is the design approach in the Pacemaker radio.

How the mixer works

The mixer/oscillator stage is usually based on just a single transistor but it performs an extraordinarily complex role. Just how a mixer stage works is often glossed over in many texts. However, its function is critical in even the most basic AM transistor radio.

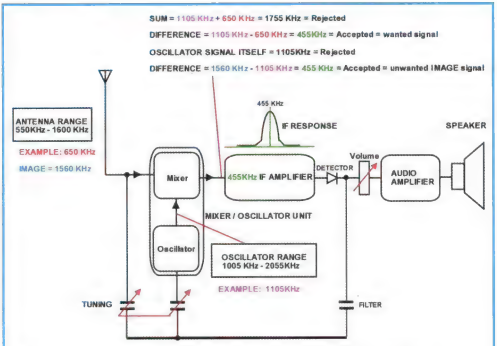

Fig.1: the basic configuration of a superheterodyne AM radio receiver. Also shown are the various frequencies generated by the oscillator/mixer circuit when the set is tuned to 650kHz. Note that the oscillator is tuned so that it always runs 455kHz higher than the tuned signal frequency.

In order to generate sum and difference frequencies of two periodic waveforms such as sinewaves (or cosine waves), the two signals must in fact be multiplied together. It won't work if the signals are simply added.

So how does a transistor mixer-oscillator stage multiply two signals? First, let's consider two cosine waves with angular frequencies of $w1$ and $w2$ radians per second (note $w = 2\pi f$, where f is the frequency). Multiplying the angular frequency w by time t yields the angle in radians. Thus, the electrical or magnetic component of a radio wave has the general form $Y = A.cos(wt)$ where Y is the amplitude varying with time and A is the peak amplitude, while the frequency $f = w \div 2\pi$.

If we multiply the two normalised angular components together, we get: $cos(w1t).cos(w2t) = 0.5cos[(w1 + w2)t] + 0.5cos[(w1 - w2)t]$

This trigonometric identity is available from many texts. So something quite remarkable has happened. Multiplying the two waveforms has resulted in two other components which are (1) the sum of the two initial frequencies and (2) the difference of the two frequencies. They both have half the amplitude of the original waveforms.

Note: this result is also recognisable as the frequency spectrum of amplitude modulation (AM) itself, with a central carrier and a sideband on either side with half the amplitude. Mixers are in fact also modulators.

In specialised mixer integrated circuits (such as the MC1496), the multiplication of two signals is exactly as per the equation above. This IC is a "voltage multiplier". However, in the case of a single transistor mixer (or mixer-oscillator) in a typical transistor radio, the situation is a little different.

Fig.2 shows what happens when two different signals, a and b, are added and then amplified either by a linear amplifier in one example or a "square law" amplifier in the other. As can be seen, linear amplification results in simple scaled up amplitudes of signals a and b. On the other hand, if the amplification obeys a square law, then the product of signals a and b appears as the term $2ab$.

In the latter case, signals a and b have been multiplied by summation followed by square law amplification. Other signals also appear which are equal to the square of signal a and the

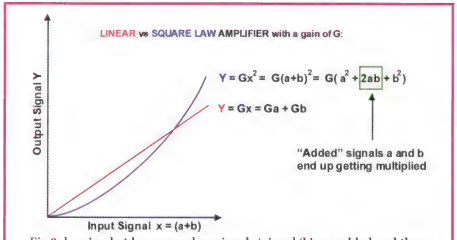

Fig.2: here's what happens when signals 'a' and 'b' are added and then amplified either by a linear (red) amplifier or a "square law" (blue) amplifier. Note that if the amplification obeys a square law, then the product of signals 'a' and 'b' appears as the term "2ab".

square of signal ***b***. If we represent these signals as cosine waveforms instead, we find out what happens when two added waveforms are squared:

$$(a + b)^2 = [cos(w1t) + cos(w2t)]^2$$
$$= 1 + 0.5cos(2w1t) + 0.5cos(2w2t) +$$
$$cos[(w1 + w2)t] + cos[(w1 - w2)t]$$

Again the sum and difference of the two waveforms has appeared but this time their amplitude hasn't halved. The "1" represents a DC component. In addition, there are components which are twice the frequency (ie, second harmonics) of the original cosine waveforms.

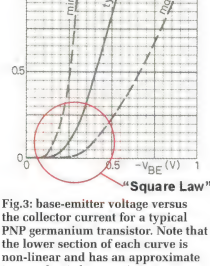

Fig.3: base-emitter voltage versus the collector current for a typical PNP germanium transistor. Note that the lower section of each curve is non-linear and has an approximate 'square law' characteristic.

So squaring a cosine (or sine) wave doubles its frequency and one easy method of frequency doubling is to pass a sinewave through a squarer circuit. As a result, the output of a simple transistor mixer stage consists of a "cocktail" of different signals, as follows:

(1) the received radio station frequency;
(2) the oscillator frequency;
(3) the sum of the oscillator and tuned station frequencies;
(4) the difference between the oscillator and tuned station frequencies;
(5) twice the tuned station frequency;
(6) twice the oscillator frequency; and
(7) the transistor's DC bias.

In addition, for anything other than perfect square law amplification, there will be other frequencies or harmonics in the mixer's output current or output signal. In fact, the transfer curve can be represented by a polynomial of the form: $ax + bx^2 + cx^3 + dx^4 \ldots$ *etc.*

It turns out that "cubing" a sinewave, for example, results in a third harmonic, ie, three times the frequency. This means that there can be second, third, fourth, fifth etc harmonics of both the oscillator signal and the tuned frequency at the mixer's output. However, these signals are rejected by the IF amplifier which only amplifies 455kHz ± about 5kHz.

A transistor operating at a low bias level has a voltage amplification response curve which is non-linear. In fact, it's very similar to the blue curve shown in Fig.2. This isn't obvious from most transistor data sheets because the transistor's base-emitter voltage usually isn't plotted against collector current.

Instead, more often than not, the base current is plotted against collector current which looks more linear and the slope at any point is the small signal current gain.

A transistor's base-emitter junction has a response (or function) that's very similar to a simple diode. The collector current is converted to a voltage by the impedance in the collector load circuit. So a transistor operating at low bias levels, is an approximate square law device when used as a voltage amplifier.

So too are field effect transistors and an MPF102 junction FET, for example, also makes a good mixer or mixer/oscillator (and these better approximate a square law function).

Fig.3 (from a Philips manual) shows the base-emitter voltage versus the

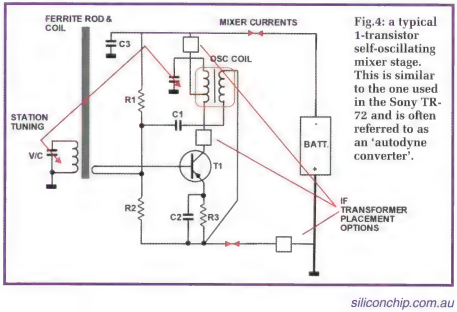

Fig.4: a typical 1-transistor self-oscillating mixer stage. This is similar to the one used in the Sony TR-72 and is often referred to as an 'autodyne converter'.

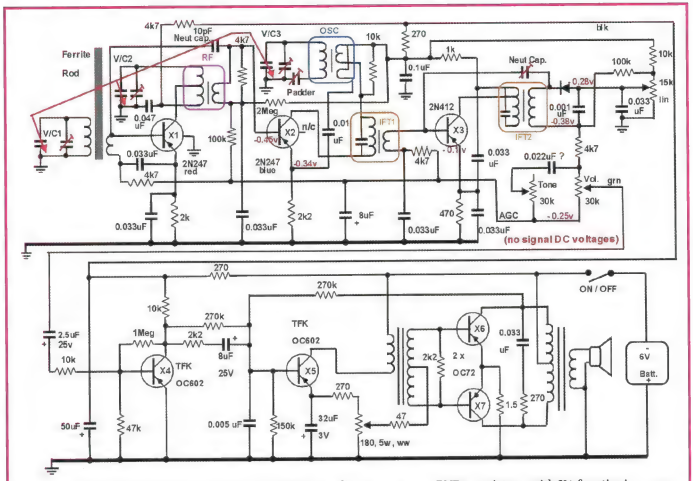

Fig.5: the circuit of the NZ-made Pacemaker transistor radio. It uses seven PNP transistors, with X1 functioning as an RF amplifier. X2 is the mixer/oscillator, X3 the IF amplifier and X4-X5 form the audio amplifier stage.

collector current for a PNP germanium transistor. As can be seen, the lower section of each curve is non-linear and has a square law characteristic, especially for base-emitter voltages of less than 0.5V.

Typical mixer

Fig.4 shows a typical one-transistor self-oscillating mixer stage. This is the basic configuration used in the Sony TR-72 (except that the TR-72 uses an NPN transistor) and is often referred to as an 'autodyne converter'. The mixer in the Pacemaker radio described later has a slightly different configuration.

The mixer's output, containing all the signal components, is fed to the primary of the first IF transformer. As with the other IF transformers in the radio, this is tuned to a centre frequency of 455kHz.

The first IF transformer's primary winding is simply placed in series with the mixer circuit's output. It's in series with mixer transistor's emitter in the TR-72 and in series with the collector in the Pacemaker radio.

There are many other single-transistor self-oscillating mixer configurations. Often, the feedback that's necessary to sustain oscillation is taken from the oscillator coil and applied to the transistor's emitter instead of its base. However, they all have the same function and it's necessary for the transistor to be lightly biased and operating in its non-linear region.

The variable capacitor (V/C) tunes the ferrite rod antenna circuit and is ganged to a second variable capacitor which tunes the oscillator coil. In most transistor radios (eg, the Sony TR-72), the tuning-gang section used in the oscillator is smaller that the antenna section. This is done to ensure that the oscillator frequency tracks the tuned frequency, so that they remain close to 455kHz apart with minimal tracking errors.

In some radios (such as the Pacemaker) though, the tuning gang sections are identical. As a result, an extra capacitor, called a 'padder', is placed in series with the oscillator section to reduce its value by the correct amount.

Referring back to Fig.4, R1 and R2 are the transistor's bias resistors and these set its DC operating conditions. The tuned RF signal from the small coupling coil on the ferrite rod is fed to the transistor's base circuit, while the oscillator feedback signal is fed to the base via C1 (which helps maintain oscillation).

Note that the coupling coil on the ferrite rod has a relatively small number of turns feeding the transistor's base circuit. This ensures that the main tuned winding on the ferrite rod is not heavily loaded. Capacitor C2 and resistor R3 help the transistor maintain a stable DC bias condition.

Finally, the polarity of the oscillator coil windings is such that the feedback is positive to sustain oscillation. Capacitor C3 bypasses any radio frequencies on the supply line.

Pacemaker circuit details

I was unable to locate the original

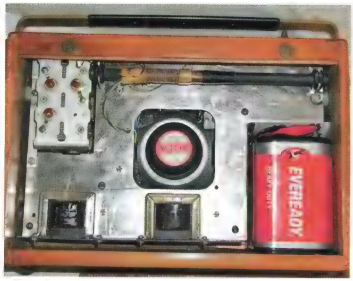

The view inside the Pacemaker Transportable. Most of the parts are obscured by its large metal chassis although the ferrite rod antenna is visible, as are the 3-gang tuning capacitor, the battery and the driver and audio output transformers.

manufacturer's schematic, so it was laboriously traced out from the radio itself which is probably a 1960 version.

Fig.5 shows the circuit details. Apart from the RF stage, it's similar in many respects to Sony's TR-72 but one obvious difference is that the Pacemaker Transportable uses PNP germanium transistors while the TR-72 uses NPNs. It also uses one less transistor in the IF stage, although both are still 7-transistor radios.

The RF stage (or pre-selector) is based on transistor X1 (a 2N247), an RF coil and one gang of the 3-gang tuning capacitor. This RF stage is neutralised using a fixed 10pF capacitor to ensure stability. This is necessary because the tuned circuits in the base and collector sections of X1 operate at the same frequency and would otherwise exchange energy with each other via the transistor's Miller capacitance, causing the stage to burst into oscillation. As stated, the tuning capacitor (V/C) has three identical sections and looks the same as those commonly used in valve radios of the time.

The mixer-oscillator stage is based on transistor X2. This has in-phase feedback from the oscillator coil to its emitter in order to sustain oscillation. This differs from the mixer circuit of the Sony TR-72 which uses out-of-phase feedback to the transistor's base.

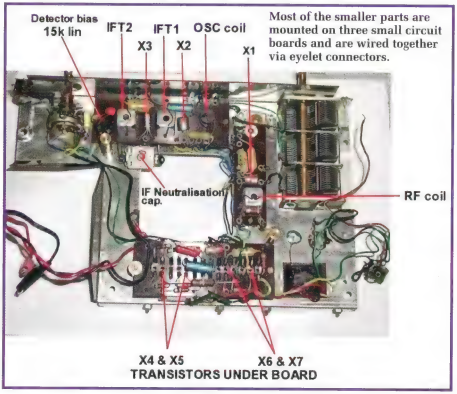

IF amplifier

As mentioned, the Pacemaker has one less IF amplifier stage and one less IF transformer than typical transistor radios of the time. However, the resulting loss of gain and selectivity in the IF section is compensated for by the gain provided by the tuned RF stage based on transistor X1.

In fact, the net overall gain is similar to that in a standard radio. However, due to the selectivity of the RF stage, the image rejection is substantially improved and there is probably also less mixer noise.

The 455kHz IF signal from mixer X2 is fed to IF transformer IFT1 and then to neutralised IF amplifier stage X3. This in turn feeds IF transformer IFT2 which then feeds the resulting IF signal to the detector diode.

The detector diode carried no type number but is probably an OA90 or similar. The detector has been arranged with bias control. The diode's cathode is at the AGC voltage, which is about -0.38V, and this tends to excessively forward bias the diode, even in the absence of signal. To counter this, another negative voltage (developed across a 15kΩ trimpot) is applied to the anode.

In my set, this was about -0.28V, which leaves a residual 100mV of forward bias. This value was probably the factory setting, since a small amount of detector forward bias can help demodulate weak signals.

Automatic gain control

AGC is applied to transistors X1, X2 and X3. Note that less AGC range is applied to mixer-oscillator X2, as it is sourced from a divider comprising 100kΩ and 2MΩ resistors. High AGC levels can deactivate an oscillator and some so designers consider it unwise to apply AGC to this stage. In this circuit though, the 2MΩ resistor biases X2 so that it stays in oscillation even though some AGC is applied.

Audio amplifier stages

The audio amplifier also has some interesting features. Input stage X4 is a grounded-emitter amplifier and is DC stabilised by collector-to-base feedback via a 1MΩ resistor. Direct coupling from X4's collector is then

The Pacemaker Transportable is housed in an attractive timber case with the on/off/volume and tuning controls mounted at the top. Note that the tuning dial has 'North Is' and 'South Is' sections and carries NZ station call-signs.

used to establish the bias on driver stage X5. X5's emitter current in turn sets the bias current for output transistors X6 & X7 (both OC72s), depending on the voltage developed across a 180Ω 5W wirewound adjustable resistor.

This arrangement is very unusual. It means that the output stage's bias and current stability is controlled by input transistor X4's Vbe (base-emitter voltage) characteristic, which is very dependent on temperature. As it heats up, X4's Vbe drops and the transistor turns on harder. This lowers the voltage on X4's collector and in turn lowers the base bias voltage applied to X5.

As a result, X5's emitter voltage drops and this tends to 'throttle back' the output transistors. So it would appear the designers have used audio input transistor X4 as a "temperature compensation device" for the output stage.

There is also a small amount of low-frequency and negative DC feedback from the collector of X6 (ie, via the 270kΩ resistor). This contributes to the DC stability but this effect is limited due to the relatively low resistance of the output transformer's primary windings. It could also possibly be some sort of anti motor-boating network, as its AC frequency response is such that it's only active below about 100-200Hz.

Once again, this arrangement is very unusual. There is no conventional audio AC negative feedback in the Pacemaker, such as seen around the audio stages of radios such as the Sony TR-72. Normally, feedback is derived from the speaker itself and fed to the driver transistor's emitter circuit.

Assembly method

One of the accompanying photos shows the view inside this unique radio. There's really little to see since most of the parts are covered by a metal chassis and are protected from the owner's prying fingers. However, the ferrite rod assembly and the audio driver and output transformers are visible, along with the elliptical Rola loudspeaker and the 3-gang variable tuning capacitor.

The radio runs from a 6V lantern battery (also visible). This is extremely long-lasting in this application since the current drain is only about 10mA.

Another photo shows the chassis assembly after it has been removed from the cabinet. Most of the smaller parts are mounted on small boards and are wired via eyelet connectors.

Finally, as with the Sony TR-72, the Pacemaker Transportable is housed in an attractive timber case with the controls mounted at the top. It also has a metal carrying handle. All in all, it is a well-made radio with excellent performance. SC

Mixer-Oscillator Operation

Measurements taken in the mixer-oscillator stage confirm that transistor X2 operates in its non-linear region. The accompanying scope grab, taken under no signal conditions, shows the voltage across X2's base-emitter terminals with the scope input channel set to DC and 100mV/div sensitivity. X2's AC collector voltage was recorded at the same time (upper trace) and as can be seen, it doesn't linearly follow the base-emitter voltage.

When a radio station signal is received, the waveforms become very complex, with many frequencies and harmonics.

This set has a positive earth which means that an increase in the negative deflection on the scope corresponds to an increase in absolute voltage. At times during the oscillator cycle, transistor X2 is actually cut off since its base-emitter voltage is at 0V or is slightly positive.

Although the collector voltage is a little distorted, the sinewave voltage across the oscillator tank circuit of VC3 and its padder capacitor is undistorted, as is the feedback voltage to X2's emitter. Basically, the scope confirms that the transistor X2 operates over a base-emitter voltage range of about -200mV and is therefore operating in its non-linear area so that it behaves as a "mixer".

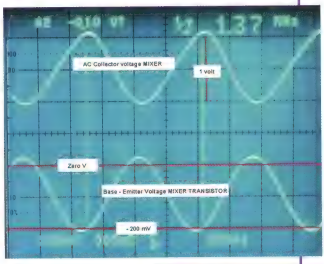

SILICON CHIP ONLINESHOP

.com.au/shop

Looking for a specialised component to build that latest and greatest *Silicon Chip* project? Maybe it's the PCB you're after. Or a pre-programmed micro. Or some other hard-to-get "bit". The chances are they are available direct from the **Silicon Chip ONLINESHOP**.

As a service to readers, **Silicon Chip** has established the **ONLINESHOP**. No, we're not going into opposition with your normal suppliers – this is a direct response to requests from readers who have found difficulty in obtaining specialised parts such as PCBs & micros.

- PCBs are normally IN STOCK and ready for despatch when that month's magazine goes on sale (you don't have to wait for them to be made!).
- Even if stock runs out (eg, for high demand), in most cases there will be no longer than a two-week wait.
- One low p&p charge: $10 per order, regardless of how many boards or micros you order! (**Australia only**; overseas clients – email us for a postage quote).
- Our PCBs are beautifully made, very high quality fibreglass boards with pre-tinned tracks, silk screen overlays and where applicable, solder masks.
- Best of all, those boards with fancy cut-outs or edges are already cut out to the *SILICON CHIP* specifications – no messy blade work required!

HERE'S HOW TO ORDER:

VISA MasterCard PayPal

Via the INTERNET (24 hours, 7 days)
Log on to our secure website: siliconchip.com.au, **click on "SHOP" and follow the links**

Via EMAIL (24 hours, 7 days)
email silicon@siliconchip.com.au – **Clearly tell us what you want and include your contact and credit card details**

Via FAX (24 hours, 7 days)
(02) 9939 2648 (INT: 612 9939 2648). Clearly tell us what you want and include your contact and credit card details

Via MAIL (24 hours, 7 days)
PO Box 139, Collaroy NSW 2097. Clearly tell us what you want and include your contact and credit card details

Via PHONE (9am-5pm, Mon-Fri)
Call (02) 9939 3295 (INT 612 9939 3295) – have your order ready, including contact and credit card details!

YES! You can also order or renew your Silicon Chip subscription via any of these methods as well!

PRE-PROGRAMMED MICROS

Price for any of these micros is just $15.00 each + $10 p&p per order#

As a service to readers, ***Silicon Chip OnlineShop*** stocks microcontrollers and microprocessors *used in new projects* (from 2012 on) and some selected older projects – **pre-programmed and ready to fly!** *Some micros from copyrighted and/or contributed projects may not be available.*

PIC12F675-I/P	UHF Remote Switch (Jan09), Ultrasonic Cleaner (Aug10), Ultrasonic Anti-fouling (Sep10), Cricket/Frog (Jun12) Do Not Disturb (May13) IR-to-UHF Converter (Jul13), UHF-to-IR Converter (Jul13) PC Birdies * 2 chips – $15 pair* (Aug13)
PIC16F1507-I/P	Wildeband Oxygen Sensor (Jun-Jul12)
PIC16F88-E/P	Hi Energy Ignition (Nov/Dec12), Speedo Corrector (Sept13), Auto Headlight Controller (Oct13) 10A 230V Motor Speed Controller (Feb14)
PIC16F88-I/P	Projector Speed (Apr11), Vox (Jun11), Ultrasonic Water Tank Level (Sep11), Quizzical (Oct11) Ultra LD Preamp (Nov11), 10-Channel Remote Control Receiver (Jun13), Revised 10-Channel Remote Control Receiver (Jul13), Nicad/NiMH Burp Charger (Mar14)
PIC16LF88-I/P	Garbage Reminder (Jan13), Bellbird (Dec13)
PIC16LF88-I/SO	LED Ladybird (Apr13)
PIC16F877A-I/P	6-Digit GPS Clock (May-Jun09), Lab Digital Pot (Jul10) Sentinel (Feb-Mar12)
PIC18F2550-I/SP	Batt Capacity Meter (Jun09), Intelligent Fan Controller (Jul10)
PIC18F45K80	USB Power Monitor (Dec12)
PIC18F4550-I/P	GPS Car Computer (Jan10), GPS Boat Computer (Oct10)
PIC18F14K50	USB MIDIMate (Oct11)
PIC18F27J53-I/SP	USB Data Logger (Dec10-Feb11)
PIC18LF14K22	Digital Spirit Level (Aug11), G-Force Meter (Nov11)
PIC18F1320-I/SO	Intelligent Dimmer (Apr09)
PIC32MX795F512H-80I/PT	Maximite (Mar11), miniMaximite (Nov11), Colour Maximite (Sept/Oct12)
PIC32MX250F128B-I/SP	GPS Tracker (Nov13)
PIC32MX470F512H-I/PT	Stereo Audio Delay/DSP (Nov13), Stereo Echo/Reverb (Feb 14)
dsPIC33FJ128GP802-I/SP	Digital Audio Signal Generator (Mar-May10), Digital Lighting Controller (Oct-Dec10), SportSync (May11), Digital Audio Delay (Dec11) Level (Sep11) Quizzical (Oct11), Ultra-LD Preamp (Nov11), LED Musicolor (Nov12)
dsPIC33FJ64MC802-E/P	Induction Motor Speed Controller (revised) (Aug13)
dsPIC33FJ128GP306-I/PT	CLASSIC DAC (Feb-May 13)
ATTiny861	VVA Thermometer/Thermostat (Mar10), Rudder Position Indicator (Jul11)
ATTiny2313	Remote-Controlled Timer (Aug10)
ATMega48	Stereo DAC (Sep-Nov09)

When ordering, be sure to nominate BOTH the micro required AND the project for which it must be programmed.

SPECIALISED COMPONENTS, SHORT-FORM KITS, ETC

P&P – $10 Per order#

RF Probe All SMD parts	(Aug13)	**$5.00**
G-FORCE METER/ACCELEROMETER Short form kit (contains PCB (04108111), programmed PIC micro, MMA8451Q accelerometer chip and 4 Mosfets)	(Aug11/Nov11) ~~$44.50~~	**$40.00**
DIGITAL SPIRIT LEVEL Short form kit (contains PCB (04108111), programmed PIC micro, MMA8451Q accelerometer chip and 4 Mosfets)	(Aug11/Nov11) ~~$44.50~~	**$40.00**
CLASSIC DAC Semi kit Includes three hi-de-spec SMD ICs: CS8416-CZZ, CS4398-CZZ and PLL1708DBQ plus an accurate 27MHz crystal and ten 3mm blue LEDs with diffused lenses	(Feb-May13)	**$45.00**
"LUMP IN COAX" MINI MIXER SMD parts kit: Includes: 2 x OPA4348AID, 1 x BQ2057CSN, 2 x DMP2215L, 1 x BAT54S, 1 x 0.22Ω shunt	*(Jun13)*	**$20.00**
LF-HF UP-CONVERTER SMD parts kit: Includes: FXO-HC536R-125 and SA602AD and all SMD passive components	*(Jun13)*	**$15.00**
ISL9V5036P3 IGBT As used in high energy ignition and Jacob's Ladder	*(Nov/Dec12)* (Feb13)	**$10.00**
2.5GHz Frequency Counter *(Dec12/Jan13) LED Kit:* 3 x 4-digit blue LED displays *MMC & Choke Kit:* ERA-2SM+ Wideband MMC and ADCH-80+ Wideband Choke		**$15.00** **$15.00**
IPP230N06L3 N-Channel logic level Mosfets As used in a variety of Silicon Chip Projects (Pack of 2)		**$7.50**
ZXCT1009 Current Shunt Monitor IC As used in DCC Reverse Loop Controller/Block Switch (Pack of 2)	*(Oct12)*	**$5.00**
LF-HF Up-converter Omron G5V-1 5V SPDT 5V relay	*(June13)*	**$2.00**
SMD parts for SiDRADIO Same as LF-UF Upconverter parts but includes 5V relay and BF998 dual-gate Mosfet.	*(Oct13)*	**$20.00**
GPS Tracker MCP16301 SMD regulator IC and 15µH inductor	*(Nov13)*	**$5.00**
STEREO AUDIO DELAY WM8731 DAC IC and SMD capacitors.	*(Nov13)*	**$29.00**
NICAD/NIMH BURP CHARGER 1 SPD15P10 P-channel logic Mosfet & 1 IPP230N06L3 N-channel logic Mosfet	*(Mar14)*	**$7.50**
USB/RS232C ADAPTOR MCP2200 USB/Serial converter IC	*(Apr14)*	**$7.50**
10A 230V AC MOTOR SPEED CONTROLLER 40A IGBT; 30A Fast Recovery Diode, IR2125 Driver and NTC Thermistor	*(Feb14)*	**$45.00**
TENDA USB/SD AUDIO PLAYBACK MODULE (TD898)	*(Jan12)*	**$33.00**
JST CONNECTOR LEAD 3-WAY	*(Jan12)*	**$4.50**
JST CONNECTOR LEAD 2-WAY	*(Jan12)*	**$3.45**
RADIO & HOBBIES ON DVD-ROM (Needs PC & reader to play!)	*n/a*	**$62.00**

LOOKING FOR TECHNICAL BOOKS? YOU'LL FIND THE COMPLETE LISTING OF ALL BOOKS AVAILABLE IN THE SILICON CHIP ONLINE BOOKSTORE – ON THE "BOOKS & DVDs" PAGES OF OUR WEBSITE

*All items subject to availability. Prices valid for month of magazine issue only. All prices in Australian dollars and included GST where applicable. **# P&P prices are within Australia. O'seas? Please email for a quote**

PRINTED CIRCUIT BOARDS

NOTE: These listings are for the PCB only – *not a full kit.* If you want a kit, contact the kit suppliers advertising in this issue.
Prices in GREEN are lower prices: buy now while stocks last!

PRINTED CIRCUIT BOARD TO SUIT PROJECT:	PUBLISHED:	PCB CODE:	Price:
CHAMP: SINGLE CHIP AUDIO AMPLIFIER	FEB 1994	01102941	$5.00
PRECHAMP: 2-TRANSISTOR PREAMPLIER	JUL 1994	01107941	$5.00
HEAT CONTROLLER	JULY 1998	10307981	$10.00
MINIMITTER FM STEREO TRANSMITTER	APR 2001	06104011	$25.00
MICROMITTER FM STEREO TRANSMITTER	DEC 2002	06112021	$10.00
SMART SLAVE FLASH TRIGGER	JUL 2003	13107031	$10.00
12AX7 VALVE AUDIO PREAMPLIFIER	NOV 2003	01111031	$25.00
POOR MAN'S METAL LOCATOR	MAY 2004	04105041	$10.00
BALANCED MICROPHONE PREAMP	AUG 2004	01108041	$25.00
LITTLE JIM AM TRANSMITTER	JAN 2006	06101062	$25.00
POCKET TENS UNIT	JAN 2006	11101061	$25.00
STUDIO SERIES RC MODULE	APRIL 2006	01104061	$25.00
ULTRASONIC EAVESDROPPER	AUG 2006	01208061	$25.00
RIAA PREAMPLIFIER	AUG 2006	01108061	$25.00
GPS FREQUENCY REFERENCE (A) (IMPROVED)	MAR 2007	04100972	$20.00
GPS FREQUENCY REFERENCE DISPLAY (B)	MAR 2007	04103072	$20.00
KNOCK DETECTOR	JUNE 2007	05106071	$25.00
SPEAKER PROTECTION AND MUTING MODULE	JULY 2007	01207071	$20.00
CDI MODULE SMALL PETROL MOTORS	MAY 2008	05105081	$15.00
LED/LAMP FLASHER	SEP 2008	11009081	$10.00
12V SPEED CONTROLLER/DIMMER (Use Hot Wire Cutter PCB from Dec 2010 [18112101])			
USB-SENSING MAINS POWER SWITCH	JAN 2009	10101091	$45.00
DIGITAL AUDIO MILLIVOLTMETER	MAR 2009	04103091	$35.00
INTELLIGENT REMOTE-CONTROLLED DIMMER	APR 2009	10104091	$10.00
INPUT ATTENUATOR FOR DIG. AUDIO M'VOLTMETER	MAY 2009	04205091	$10.00
6-DIGIT GPS CLOCK	MAY 2009	04105091	$30.00
6-DIGIT GPS CLOCK DRIVER	JUNE 2009	07106091	$20.00
UHF ROLLING CODE TX	AUG 2009	15008091	$10.00
UHF ROLLING CODE RECEIVER	AUG 2009	15008092	$45.00
6-DIGIT GPS CLOCK AUTODIM ADD-ON	SEPT 2009	04208091	$5.00
STEREO DAC BALANCED OUTPUT BOARD	JAN 2010	01101101	$25.00
DIGITAL INSULATION METER	JUN 2010	04106101	$25.00
ELECTROLYTIC CAPACITOR REFORMER	AUG 2010	04108101	$40.00
ULTRASONIC ANTI-FOULING FOR BOATS	SEP 2010	04109101	$25.00
HEARING LOOP RECEIVER	SEP 2010	01209101	$25.00
S/PDIF/COAX TO TOSLINK CONVERTER	OCT 2010	01210101	$10.00
TOSLINK TO S/PDIF/COAX CONVERTER	OCT 2010	01210102	$10.00
DIGITAL LIGHTING CONTROLLER SLAVE UNIT	OCT 2010	16110102	$45.00
HEARING LOOP TESTER/LEVEL METER	NOV 2010	01111101	$25.00
UNIVERSAL USB DATA LOGGER	DEC 2010	04112101	$25.00
HOT WIRE CUTTER CONTROLLER	DEC 2010	18112101	$10.00
433MHZ SNIFFER	JAN 2011	08101111	$10.00
CRANIAL ELECTRICAL STIMULATION	JAN 2011	99101111	$25.00
HEARING LOOP SIGNAL CONDITIONER	JAN 2011	01101111	$25.00
LED DAZZLER	FEB 2011	16102111	$20.00
12/24V 3-STAGE MPPT SOLAR CHARGER	FEB 2011	14102111	$15.00
SIMPLE CHEAP 433MHZ LOCATOR	FEB 2011	06102111	$5.00
THE MAXIMITE	MAR 2011	08103111	$15.00
UNIVERSAL VOLTAGE REGULATOR	MAR 2011	18103111	$10.00
12V 20-120W SOLAR PANEL SIMULATOR	MAR 2011	04103111	$10.00
MICROPHONE NECK LOOP COUPLER	MAR 2011	01209101	$25.00
PORTABLE STEREO HEADPHONE AMP	APRIL 2011	01104111	$10.00
CHEAP 100V SPEAKER/LINE CHECKER	APRIL 2011	04104111	$10.00
PROJECTOR SPEED CONTROLLER	APRIL 2011	13104111	$10.00
SPORTSYNC AUDIO DELAY	MAY 2011	01105111	$30.00
100W DC-DC CONVERTER	MAY 2011	11105111	$15.00
PHONE LINE POLARITY CHECKER	MAY 2011	12105111	$10.00
20A 12/24V DC MOTOR SPEED CONTROLLER MK2	JUNE 2011	11106111	$15.00
USB STEREO RECORD/PLAYBACK	JUNE 2011	07106111	$20.00
VERSATIMER/SWITCH	JUNE 2011	19106111	$25.00
USB BREAKOUT BOX	JUNE 2011	04106111	$10.00
ULTRA-LD MK3 200W AMP MODULE	JULY 2011	01107111	$25.00
PORTABLE LIGHTNING DETECTOR	JULY 2011	04107111	$20.00
RUDDER INDICATOR FOR POWER BOATS (4 PCBs)	JULY 2011	03107114	$80 per set
VOX	JULY 2011	01207111	$20.00
ELECTRONIC STETHOSCOPE	AUG 2011	01108111	$10.00
DIGITAL SPIRIT LEVEL/INCLINOMETER	AUG 2011	04108111	$10.00
ULTRASONIC WATER TANK METER	SEP 2011	04108111	$20.00
ULTRA-LD MK2 AMPLIFIER UPGRADE	SEP 2011	01209111	$5.00
ULTRA-LD MK3 AMPLIFIER POWER SUPPLY	SEP 2011	01109111	$25.00
HIFI STEREO HEADPHONE AMPLIFIER	SEP 2011	01309111	$20.00
GPS FREQUENCY REFERENCE (IMPROVED)	SEP 2011	04103073	$30.00
HEARING LOOP RECEIVER/NECK COUPLER	SEP 2011	01209101	$10.00
DIGITAL LIGHTING CONTROLLER LED SLAVE	OCT 2011	16110111	$20.00
USB MIDIMATE	OCT 2011	23110111	$25.00
QUIZZICAL QUIZ GAME	OCT 2011	08110111	$25.00
ULTRA-LD MK3 PREAMP & REMOTE VOL CONTROL	NOV 2011	01111111	$30.00
ULTRA-LD MK3 INPUT SWITCHING MODULE	NOV 2011	01111112	$20.00
ULTRA-LD MK3 SWITCH MODULE	NOV 2011	01111113	$10.00
ZENER DIODE TESTER	NOV 2011	04111111	$20.00
MINIMAXIMITE	NOV 2011	07111111	$10.00
ADJUSTABLE REGULATED POWER SUPPLY	DEC 2011	18112111	$5.00
DIGITAL AUDIO DELAY	DEC 2011	01212111	$25.00
DIGITAL AUDIO DELAY Front & Rear Panels	DEC 2011	01212112/3	$20 per set
AM RADIO	JAN 2012	08101121	$10.00
STEREO AUDIO COMPRESSOR	JAN 2012	01201121	$30.00

PRINTED CIRCUIT BOARD TO SUIT PROJECT:	PUBLISHED:	PCB CODE:	Price:
STEREO AUDIO COMPRESSOR FRONT & REAR PANELS	JAN 2012	01201121/2	$20.00
3-INPUT AUDIO SELECTOR (SET OF 2 BOARDS)	JAN 2012	01101121/2	$30 per set
CRYSTAL DAC	FEB 2012	01102121	$30.00
SWITCHING REGULATOR	FEB 2012	18102121	$5.00
SEMTEST LOWER BOARD	MAR 2012	04103121	$40.00
SEMTEST UPPER BOARD	MAR 2012	04103122	$40.00
SEMTEST FRONT PANEL	MAR 2012	04103123	$75.00
INTERPLANETARY VOICE	MAR 2012	08102121	$10.00
12/24V 3-STAGE MPPT SOLAR CHARGER REV.A	MAR 2012	14102112	$20.00
SOFT START SUPPRESSOR	APR 2012	10104121	$10.00
RESISTANCE DECADE BOX	APR 2012	04104121	$20.00
RESISTANCE DECADE BOX PANEL/LID	APR 2012	04104122	$20.00
1.5kW INDUCTION MOTOR SPEED CONT. (New V2 PCB)	APR (DEC) 2012	10105122	$35.00
HIGH TEMPERATURE THERMOMETER MAIN PCB	MAY 2012	21105121	$30.00
HIGH TEMPERATURE THERMOMETER Front & Rear Panels	MAY 2012	21105122/3	$20 per set
MIX-IT! 4 CHANNEL MIXER	JUNE 2012	01106121	$20.00
PIC/AVR PROGRAMMING ADAPTOR BOARD	JUNE 2012	24105121	$30.00
CRAZY CRICKET/FREAKY FROG	JUNE 2012	08109121	$10.00
CAPACITANCE DECADE BOX	JULY 2012	04106121	$20.00
CAPACITANCE DECADE BOX PANEL/LID	JULY 2012	04106122	$20.00
WIDEBAND OXYGEN CONTROLLER MK2	JULY 2012	05106121	$20.00
WIDEBAND OXYGEN CONTROLLER MK2 DISPLAY BOARD	JULY 2012	05106122	$10.00
SOFT STARTER FOR POWER TOOLS	JULY 2012	10107121	$10.00
DRIVEWAY SENTRY MK2	AUG 2012	03107121	$20.00
MAINS TIMER	AUG 2012	10108121	$10.00
CURRENT ADAPTOR FOR SCOPES AND DMMS	AUG 2012	04108121	$20.00
USB VIRTUAL INSTRUMENT INTERFACE	SEPT 2012	24109121	$30.00
USB VIRTUAL INSTRUMENT INT. FRONT PANEL	SEPT 2012	24109122	$30.00
BARKING DOG BLASTER	SEPT 2012	25108121	$20.00
COLOUR MAXIMITE	SEPT 2012	07109121	$20.00
SOUND EFFECTS GENERATOR	SEPT 2012	09109121	$10.00
NICK-OFF PROXIMITY ALARM	OCT 2012	03110121	$5.00
DCC REVERSE LOOP CONTROLLER	OCT 2012	09110121	$10.00
LED MUSICOLOUR	NOV 2012	16110121	$25.00
LED MUSICOLOUR Front & Rear Panels	NOV 2012	16110122	$20 per set
CLASSIC-D CLASS D AMPLIFIER MODULE	NOV 2012	01108122	$30.00
CLASSIC-D 2 CHANNEL SPEAKER PROTECTOR	NOV 2012	01108122	$10.00
HIGH ENERGY ELECTRONIC IGNITION SYSTEM	DEC 2012	05110121	$10.00
USB POWER MONITOR	DEC 2012	04109121	$10.00
1.5kW INDUCTION MOTOR SPEED CONTROLLER (NEW V2 PCB)	DEC 2012	10105122	$35.00
THE CHAMPION PREAMP and 7W AUDIO AMP (one PCB)	JAN 2013	01109121/2	$10.00
GARBAGE/RECYCLING BIN REMINDER	JAN 2013	19111121	$10.00
2.5GHz DIGITAL FREQUENCY METER – MAIN BOARD	JAN 2013	04111121	$35.00
2.5GHz DIGITAL FREQUENCY METER – DISPLAY BOARD	JAN 2013	04111122	$15.00
2.5GHz DIGITAL FREQUENCY METER – FRONT PANEL	JAN 2013	04111123	$45.00
SEISMOGRAPH MK2	FEB 2013	21102131	$25.00
MOBILE PHONE RING EXTENDER	FEB 2013	12110121	$10.00
GPS 1PPS TIMEBASE	FEB 2013	04103131	$10.00
LED TORCH DRIVER	MAR 2013	16102131	$5.00
CLASSIC DAC MAIN PCB	APR 2013	01102131	$40.00
CLASSIC DAC FRONT & REAR PANEL PCBs	APR 2013	01102132/3	$30.00
GPS USB TIMEBASE	APR 2013	04104131	$15.00
LED LADYBIRD	APR 2013	08103131	$5.00
CLASSIC-D 12V to ±35V DC/DC CONVERTER	MAY 2013	11104131	$15.00
DO NOT DISTURB	MAY 2013	12104131	$10.00
LF/HF UP-CONVERTER	JUN 2013	07106131	$10.00
10-CHANNEL REMOTE CONTROL RECEIVER	JUN 2013	15106131	$15.00
IR-TO-455MHZ UHF TRANSCEIVER	JUN 2013	15106132	$7.50
"LUMP IN COAX" PORTABLE MIXER	JUN 2013	01106131	$15.00
L'IL PULSER MKII TRAIN CONTROLLER	JULY 2013	09107131	$15.00
L'IL PULSER MKII FRONT & REAR PANELS	JULY 2013	09107132/3	$20.00/set
REVISED 10 CHANNEL REMOTE CONTROL RECEIVER	JULY 2013	15106133	$15.00
INFRARED TO UHF CONVERTER	JULY 2013	15107131	$5.00
UHF TO INFRARED CONVERTER	JULY 2013	15107132	$10.00
IPOD CHARGER	AUG 2013	14108131	$5.00
PC BIRDIES	AUG 2013	08104131	$10.00
RF DETECTOR PROBE FOR DMMs	AUG 2013	04107131	$10.00
BATTERY LIFESAVER	SEPT 2013	11108131	$5.00
SPEEDO CORRECTOR	SEPT 2013	05109131	$10.00
SIDRADIO (INTEGRATED SDR) Main PCB	OCT 2013	06109131	$35.00
SIDRADIO (INTEGRATED SDR) Front & Rear Panels	OCT 2013	06109132/3	$25.00/pr
TINY TIM AMPLIFIER (sains PCB as Headphone Amp (Sept'11))	OCT 2013	01309111	$20.00
AUTO CAR HEADLIGHT CONTROLLER	OCT 2013	03111131	$10.00
GPS TRIGGER	NOV 2013	05112131	$15.00
STEREO AUDIO DELAY/DSP	NOV 2013	01110131	$15.00
BELLBIRD	DEC 2013	08112131	$10.00
PORTAPAL-D MAIN BOARDS	DEC 2013	01111131-3	$25.00/set
(for CLASSIC-D Amp board and CLASSIC-D DC/DC Converter board refer above (Nov 2012/May 2013))			
LED PANTY STROBE (also for Hot Wire Cutter [Dec 2010])	JAN 2014	16101141	$7.50
BASS EXTENDER Mk2	JAN 2014	01112131	$15.00
L'IL PULSER-MK2 Revised	JAN 2014	09107134	$15.00
10A 230VAC MOTOR SPEED CONTROLLER	FEB 2014	10102141	$15.00
NICAD/NiMH BURP CHARGER	MAR 2014	14103141	$15.00
PRECISION 10V REFERENCE	MAR 2014	04104141	$5.00
RUBIDIUM FREQ. STANDARD BREAKOUT BOARD	APR 2014	04105141	$10.00
USB/RS232C ADAPTOR	APR 2014	07103141	$5.00

ASK SILICON CHIP

Got a technical problem? Can't understand a piece of jargon or some technical principle? Drop us a line and we'll answer your question. Send your email to silicon@siliconchip.com.au

4-digit version of Nixie clock

I know that the Nixie clock is a very old project (July 2007) but I wondered if you could give me some advice? I would like to use only the minutes and hours digits. I understand that without the 4017 chips the rest of the clock will not roll over and count. Could I just remove the Nixies from the circuit and keep the driver section?

Also in the July 2007 article, on pages 26-27, the schematic shows the hours Nixie connected differently to the corresponding IC. On all five of the others, pin 3 is connected to Nixie cathode 0, but on IC2 it feeds cathode 1. Is this correct?(B. I, via email).

● It is an old project but did you see the modifications required if you want to run it as a 24-hour clock, in the November 2013 issue, on page 46?

The wiring to the hours Nixie is different because a clock does not show the time 0:00:00. Instead the hours change from 12 to 1 (or 24 to 1) rather than 11 (or 23) to 0. So while the minutes and seconds Nixies do reset to 0, the hours Nixie resets to a 1. This is explained on page 29 on the July 2007 article under the "Hours Stage" subheading. The zero in the hours Nixie only lights during the 10 o'clock hour.

To dispense with the seconds displays, just omit the two Nixies and the associated driver transistors, their base resistors and two 68kΩ 1W resistors, and the NT1 neon and its associated 330kΩ 1W resistor.

Current measurement in Barking Dog Blaster

I recently purchased the Barking Dog Blaster kit (SILICON CHIP, September & October 2014) from Altronics and have completed the assembly. In the circuit description, you state that with four tweeters connected the current consumption is 1.1A DC. I can only measure about 100mA during the pulse burst.

Is this acceptable? I have checked over the wiring and connections and can find nothing wrong. The scope traces appear to be the same as in your publication. However, your pictures don't appear to show the volts per division, only the pulse width. (J. H., Bunbury, WA).

● The peak-to-peak voltage is shown in the measurement boxes at the bottom the oscilloscope screen shots, on pages 31 & 32 of the September 2012 issue. We don't know how you have measured the current. Current drawn during the pulses should be measured using an oscilloscope with probes connected across a 0.1Ω 5W resistor in series with the supply input.

Also, if the audible 1.5kHz test has the sound present, then the ultrasonic drive should also work correctly.

Diagnosing the OBD to RS-232 interpreter

Some time ago I purchased the SILICON CHIP OBDII to RS232 Interpreter (kit K4065) from Altronics, Perth. I have recently constructed the kit, as my VY Holden is out of warranty and needs some attention. All software, drivers etc are installed in the PC and all works fine.

The diagnostic software installed is EasyOBD II version 2.4.8. The software starts fine, goes through the system

How To Measure High-Frequency Inverter Voltage

In the past, SILICON CHIP has published several inverter circuits to drive fluorescent tubes. Is there a way I can measure the output voltage of an inverter circuit or is there a meter available that can measure it?

I understand that this is a high frequency and high AC voltage. (D. H, via email).

● The drive voltage for a fluorescent tube is not especially high – typically 200-350V. That's within the capabilities of most digital multimeters (240VAC mains being around 340-350V peak).

The high frequency would indeed be a problem if you try to measure it with a DMM set on AC volts mode. If you have an oscilloscope, you could use a high-voltage probe and then you could see not only the magnitude of the output but also the frequency and the waveform shape.

A cheaper method would be to build a rig consisting of an ultra-fast high-voltage diode (such as UF4007) and a small, high-voltage plastic film capacitor (eg, 10nF 630V metallised polyester) in a traditional rectifier/filter arrangement, in a small plastic box. It would also be a good idea to put a high-value resistor (eg, 10MΩ 1W) across the capacitor to discharge it after you have finished taking the measurement.

The procedure is to feed in the high AC voltage between the anode of the diode and the free end of the capacitor, then measure the voltage across the capacitor using a DMM in DC volts mode. You could even put a pair of insulated banana plug sockets at each end of the box, allowing you to connect a pair of clip leads safely (to go to the inverter) and a pair of banana plug to banana plug leads to go to the DMM.

This will give you a peak voltage measurement. If the output of the inverter is not a square wave (eg, if it's a sinewave) you can apply a compensating factor. For example, divide the DC voltage by twice the square root of two (approximately 2.828) to get the RMS value for the AC signal, assuming it is a sinewave.

Note that the usual precautions for dealing with high voltages should be observed.

CDI Module For A Yamaha Outboard Engine

I recently bought a boat with an old Yamaha 55hp motor. Unfortunately, the CDI had been fried.

Buying a new one would cost more than the boat and motor put together. So after an extensive search I found your CDI project. I built two of these CDIs, one to drive cylinder 1 and the other to drive cylinder 2. The units provide very good spark and I managed to start the motor within a very short time.

I made sure that cylinder 1 was at top dead centre (TDC) and confirmed that there was spark. Unfortunately, at idle the timing light indicates 25° BTDC and when throttling up the linkage system advances the timing light further and the engine dies.

I have tried everything I can think of to retard the timing closer to TDC without success. The timing plate is against the stop so I cannot move it any further to retard timing. It seems that the original CDI may have produced a delayed spark that allowed adjustment within the limits of the timing plate adjustment stops.

The new replacement CDI produces an instant spark that is way before TDC and I am unable to adjust it closer using the timing plate. Can you confirm my theory?

By the way if I fix the timing plate and throttle up, the engine revs up well but I am not sure how it will handle under load. I believe this is due to the fact that it is fixed at 25° and its set timing at 4000 RPM is 20°.

As I can make no other adjustments to the motor I must look at the CDI. Is there a way I can modify the CDI so that the spark is delayed? (S. F., via email).

- You could try delaying the trigger with rising frequency using an RC delay network. It would mean placing something like 100µF between the gate and cathode of the SCR. That capacitor could replace the 10nF capacitor that is already there.

If that does not work, try increasing the 51Ω resistor in series with the coil to 470Ω. Note, however, that the 100µF capacitor may then need reducing to around 10µF.

It could also be that the trigger is too sensitive and so it is firing too early. In that case, what you need is an attenuator for the trigger signal. You could try placing a 1kΩ resistor in series with the coil, with a 100Ω resistor following this and connected to 0V. Take the trigger signal from the junction of these 1kΩ and 100Ω resistors.

If the CDI does not trigger, try reducing the 1kΩ resistor in value. A trimpot set up to adjust this resistance could be a better way of finding the value required and a fixed resistor then installed when this is done.

checks etc, as programmed. With the ignition off or on or engine running, it follows this procedure:

- PC communication ports check. OK.
- Interface connected– PWM/VPW/ISO/CAN Multi Protocol. OK.
- Vehicle Data Bus. OK.

However, the system checking stops at: *No Vehicle Response/Connection or Power.*

I checked the OBD interface on the vehicle; pins 2, 4, 5, 9 & 16 are used. Pin 2 appears to be a signal line; pins 4 & 5 are ground; pin 9 is at 0V with the ignition off and fluctuates around 4.5V with the ignition on; pin 16 is at 12V DC. All pins match up with the kit OBD connector with the exception of pin 9 – it has no connection on the kit connector, which seems to account for the system error message.

Are there any issues with the connector pin-out or the kit wiring? The OBD connector was already assembled by Altronics but it does appear the non-connection of the vehicle connector pin 9 is the missing link for the kit to fully function. Your advice on this would be much appreciated. (R. D., Glenview, Qld).

- Pin 9 is not used for the OBDII interpreter reader. It is used at the car manufacturer's discretion and may allow more information than that available with OBDII. It does not affect using the OBDII interpreter to read OBDII data. The pin 9 pin used in the vehicle would not be the cause of the OBDII interpreter not communicating.

You could try the other recommended software. Also, communication does depend on having the data rates and communication ports on the computer set up correctly. Check for 38,400 baud rate and 8-bit data as detailed on page 30 (and page 31 for USB) of the February 2010 issue.

Another OBD quandary

I have recently acquired a 1991 Nissan Pulsar which has an engine management module under the passenger seat and I would like to be able to diagnose engine problems when they arise. Considering the age of the vehicle, is this project still valid or are you planning an upgraded version of the interpreter as a future project?

The reason that I ask is that the ELM327 which is basically the brains of the project is now in Version 2, as ascertained from the website at www.elmelectronics.com/obdic.html and if I have to order it will this new ELM327 be compatible with the project as it stands or will modifications be in order? I really would like to build this project as it is a pain to pay a mechanic just to find out what the lights mean. (I. T., via email).

- The OBDII interpreter is not suited for a 1991 Nissan Pulsar. The ECU for that vehicle is too early for it to be OBDI or OBDII-compliant. There is a lot of information about the Nissan engine fault codes, with examples on the following links:

http://codes.rennacs.com/Petrol-Engine/Japanese-Korean/Nissan-Engines.php
www.fusion-motorsport.co.uk/faqs-useful-information/7-nissan-specific-information/7-reading-nissan-fault-codes.html
www.nissanforums.com/truck-suv/84839-how-check-your-ecu-error-codes.html

More shielding for the SIDRadio

I have a couple of queries regarding the shielding used in the SIDRadio project (Silicon Chip, October & November 2013). I notice that there was no mention of shields for the sides of the enclosure, only the top, bottom and front/back panels. Was there any particular reason for this?

Technical Product Manager

Jaycar

Jaycar Electronics is a leading Specialist Electronics Retailer with a store network of 80 stores across Australian and NZ. They are Australian privately owned company with a 30 year track record of success and seeking to appoint an experienced Technical Product Manager, located at the Rydalmere, NSW, Head Office.

Working closely with the Production and Product Management Teams, your key focus is to assess all new products, develop product specifications and investigate reported issues with existing products and implement corrective action for the company's range of products.

You will have previous work experience in the electronics field. This will include experience in product assessment, testing, regulations, standards and compliance. Along with a thorough understanding of analog and digital electronics, as well as audio, video and power products.

You also possess excellent troubleshooting skills and a strong attention to detail to ensure regulatory requirements and standards are achieved in relation to sale and supply of products. Attractive salary package.

To submit your application or for a confidential discussion please call Sally Parkinson at Niche Consulting Group on 03 9810 4595 or e-mail jobs@nicheconsulting.com.au.

niche www.nicheconsulting.com.au

As as alternative to the shields (except the aluminium one on the PCB) mentioned in the articles, would spraying the ABS enclosure with an RFI/EMI conductive spray achieve the same result? I know these sprays can be expensive but I thought it might be more convenient and produce a better result. (A. B., via email).

● We didn't provide shields for the sides of the enclosure of the SIDRadio, because when we tried adding some, they didn't seem to make much difference. So as it was quite 'fiddly' to provide them and make sure they were connected to the main PCB ground, we decided to leave them out.

You are right in thinking that spraying all of the inside surfaces of the enclosure with conductive EMI/RFI shielding would do the job. However, you'd have to make sure that the coating inside both halves was connected reliably to the PCB ground.

Soft starter wanted for fuel pump

Do you have a 12V DC brush-motor soft starter for a running current of 15A. I don't need speed control. The motor is driving a fuel pump an I am auto switching it on and off according to throttle position, so the pump is cycling quite a lot when driving around town. I don't think the pump motor is going last for long with this hard starting all the time. (G. C., via email).

● Have a look at the 20A 12/24V DC Motor Speed Controller from the June 2011 issue. It has an optional soft start feature. You would set it for full speed operation and each time it was switched on it would give a soft start to the pump.

High current for motor speed controller

I bought a kit for the 12/24V Motor Speed Controller and the additional Mosfet to allow 20A current draw. Unfortunately, I have found that the fuse for the heater fan is 30A.

Is there anything stopping me from putting in a third Mosfet with an additional 4.7Ω resistor off the "G" leg on the Mosfet and a third diode off the motor? I will make sure that I have a heatsink of some sort for the Mosfets to allow for extra loading. (M. D., via email).

● You could add another Mosfet in parallel with its 47Ω gate resistor although two Mosfets should be OK, with heatsinking. You only need a single diode across the fan motor (not two or three).

Note that the PCB tracks carrying the heavy current for the Mosfets would require building up with tinned copper wire between the connections in parallel with the PC tracks or with solder added to the tracks (on a non-solder masked PCB).

Questions on halogen lamp transformers

In an effort to reduce my home power usage I have replaced all my incandescent lamps with LEDs, including my halogen low-voltage downlights The NSW Office of Environment & Heritage Home Power Savings Program Energy Efficient Lighting pamphlet states that most low-

WARNING!

SILICON CHIP magazine regularly describes projects which employ a mains power supply or produce high voltage. All such projects should be considered dangerous or even lethal if not used safely.

Readers are warned that high voltage wiring should be carried out according to the instructions in the articles. When working on these projects use extreme care to ensure that you do not accidentally come into contact with mains AC voltages or high voltage DC. If you are not confident about working with projects employing mains voltages or other high voltages, you are advised not to attempt work on them. Silicon Chip Publications Pty Ltd disclaims any liability for damages should anyone be killed or injured while working on a project or circuit described in any issue of SILICON CHIP magazine.

Devices or circuits described in SILICON CHIP may be covered by patents. SILICON CHIP disclaims any liability for the infringement of such patents by the manufacturing or selling of any such equipment. SILICON CHIP also disclaims any liability for projects which are used in such a way as to infringe relevant government regulations and by-laws.

Advertisers are warned that they are responsible for the content of all advertisements and that they must conform to the Competition & Consumer Act 2010 or as subsequently amended and to any governmental regulations which are applicable.

Simple Instructions For Connecting Regulator

I bought a 1.3-22V regulated power supply kit (SILICON CHIP, May 2007). I have added everything to the PCB but I am not sure how to connect to the DC jack in and DC jack out.

The board has GND in and out, and another out. Can you give me simple instructions please. The instructions that came with the kit go overboard on the workings of the kit but not on how to wire it up. I don't want to destroy my 12V DC adaptor which will power the kit. (P. L., via email).

● Follow these instructions to connect the DC connectors. For the input connector, connect the GND on the PCB to the negative terminal of the input connector and the input (IN) on the PCB to the plus terminal of the input connector. Similarly for the output connector, connect the GND on the PCB to the negative terminal of the output connector and the output (OUT) on the PCB to the plus terminal of the output connector.

Note that the input for the supply has a diode (D1) that prevents reverse supply polarity being applied to the circuit, so you will not destroy the 12V DC adaptor or the regulator. The unmarked extra terminal on the PCB is just an alternative input that bypasses the input protection diode.

This alternative input would only be used for the supply if you are certain that the input supply will always be the correct polarity. The advantage of this input is that you can have a regulated voltage that is closer to the input.

voltage halogen downlights consume 50W and the transformer consumes an additional 15W for a total of 65W. If I replace the halogen lamp with a 5W LED will the transformer still consume 15W? If not, then how much approximately? The "transformer" is an active electronic style supplying one 5W lamp each.

A lighting shop sales lady told me that the reason they charge up to $40 for a LED lamp, without the fitting, was because the lamp was high quality and will not fade as the (much) cheaper brands do. In my years in the electronics industry I have never heard of LEDs fading. Have you?

My wife and I are very happy with the LED lamps but I learnt a few things about which LED to choose for the different situations throughout the home. I use daylight (4000K) for the kitchen, bathroom, laundry, entrance, porch etc and warm white (2700K) for the lounge, bedroom and reading lamps. The Lumen rating or the amount of light produced is more important than the wattage rating and for downlights the beam spread is important. A 30-40° spread is too narrow unless a spotlight is required. 120° LEDs are available to give a more even lighting similar to the halogen lamps. (M. F., via email).

● While it is true that iron-cored halogen lamp transformers can be expected to draw 10-15W when powering a 50W halogen, they will draw quite a bit less when powering one, two or three LEDs. You might expect the consumption to drop to around 5W or 10W when powering a 5W LED.

If you're using an electronic transformer, the power consumption is considerably less. However, we would caution against using an electronic transformer to drive 12V LEDs because they can lead to early failures. This is because they do not put out 12V at 50Hz but a much higher frequency (typically well above 20kHz) which may have quite high peak voltages. That's not a problem for a 12V halogen but it can be for 12V LEDs.

The brightness of high-power white LEDs can "fade" over a long time periods due to a deterioration of the phosphors used and the LED element itself but we would still expect them to last for many thousands of hours. However, we do not think that cheaper LEDs are any worse in this respect. Of course, there are thousands of these devices available from eBay and you can just buy a few, try them out and then buy more if they are any good.

Clamp meter project query

I have a question about the Clamp Meter project from the September 2003 issue. Is it possible that many more turns could be wound onto the clamp coil, so that the voltage output from the adaptor can provide as much as 1V per 1A of detected current etc? (P. H., via email).

● The clamp meter adaptor was designed so the clamp core could be clipped over a single turn of wire to measure current flow. It could work up to 630A AC (about 900A peak) and 900A DC without the Hall Effect sensor saturating. At this current, the output to the multimeter would be 630mV AC and around 900mV peak.

The UGN3503 Hall Effect device is rated up to 900G and typically at this magnetic field, the output would be 1.17V above or below its 0G output.

If the number of turns of the wire under test for current were increased by 1000, then the output would be 1V/A but only up to 900mA could be measured. It is impractical to wrap 1000 turns of the wire through the clamp each time current is to be measured.

Note that the diagram in Fig.7 (page 58, September 2003) shows 100 turns of wire around the core but this is for the initial calibration to set the output of the clamp meter adaptor to 66.7mV corresponding to 66.7A. That produced a 666mA current via a 12V supply and 18Ω resistor for calibrating

ANTRIM TRANSFORMERS
manufactured in Australia by
Harbuch Electronics Pty Ltd
harbuch@optusnet.com.au
Toroidal – Conventional Transformers
Power – Audio – Valve – 'Specials'
Medical – Isolated – Stepup/down
Encased Power Supplies
Toroidal General Construction
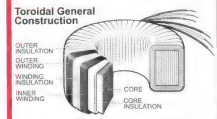

Comprehensive data available:
www.harbuch.com.au
Harbuch Electronics Pty Ltd
9/40 Leighton Pl, HORNSBY 2077
Ph (02) 9476 5854 Fax (02) 9476 3231

Question On DAC Performance

I am interested in building the "Tiny Tim" stereo amplifier as featured in the October 2013 issue. However, I have a query regarding the integrated DAC from Jaycar that is incorporated into the amplifier.

I have a similar small box that only provides analog audio on some digital TV channels (the SD channels that indicate "Stereo" on the screen) but not with others (the HD 1080i channels – One, ABC News 24, 7Mate, and GEM – that also indicate "Dolby Digital" on the screen). The one exception to this rule is SBS One HD which is 1080i but it shows as "Stereo" on the screen. My D/A box works OK on this channel. I suspect that the Jaycar unit is similar to mine, that is, it only works on some channels.

I have tried to change the "Audio Format" parameters in the Menu on my Samsung TV with no success. It shows "MPEG" with no alternative setting when the TV is tuned to a channel that normally shows as "Stereo" and "Dolby Digital" with no alternative setting when the TV is tuned to a channel that normally shows as "Dolby Digital".

I also have a BluRay disc recorder that is connected to the TV via an HDMI cable and playing anything that has been recorded on BluRay or DVD or any live TV from the recorder's tuner (even from an HD channel), gives the sound OK through my DAC box connected to the TV's optical output. The D/A problems are only with live TV via the TV's tuner on HD channels. A way around this would be to watch the HD channels via the tuner in the recorder but I think this is a rather clumsy way of doing things.

As I do not want to build the Tiny Tim amplifier with the limited performance described above, I was wondering if you know of some other commercially available small digital-to-analog audio converter that works on both "Stereo" and "Dolby Digital" channels? If there is, I could perhaps use it in my amplifier project in preference to the Jaycar item. I have looked on the internet and on eBay at several TV audio DAC units but none of them say whether they work with only one or with both audio formats Alternatively, I could construct the "High Performance CLASSiC-DAC" of February-April 2013.

Can you please advise whether or not it works on all digital TV channels and is it available as a kit? (R. P., Hamptson Park, Vic).

● Most standalone DACs will not support Dolby Digital or DTS decoding. However, usually TVs, DVD players and BluRay players have an option to "down-mix to stereo" compressed audio before sending it to the digital output. You probably have this enabled for your BluRay player which is why the DAC works when playing discs through that. It is surprising that your TV has no such option.

The only real alternative is to use a home-theatre receiver which has the surround sound decoding software/hardware built-in and then set it to down-mix to stereo. Of course, that effectively removes the need to build the Tiny Tim amplifier.

at the equivalent of 66.7A. This is in preference to using a 66.7A calibration current.

LED voltage & power ratings

What wattage LEDs can I use for the LED Musicolour (Silicon Chip, October & November 2012)? I have never used LEDs before. (T. A., via email).

● It depends on whether you are running the unit from 12V or 24V. 12V would be the most common choice and this allows 120W of LEDs to be driven by the unit.

So if you are using all eight outputs to drive eight LEDs/sets of LEDs, each set can be up to 15W in total. If you use less outputs, they can drive more powerful LEDs, so for example if you use four outputs, each can handle 30W of LEDs.

A 15W LED is pretty bright and if they consist of strips of individual LEDs at a typical 20mA operating current, that's 750 LEDs per output (500 @ 30mA). So generally the 120W total limit isn't a serious limitation. Note that the DC supply you use needs to be able to supply all this current, ie, 10A for 120W at 12V.

This can be a 12V battery on charger (which will actually be more like 13.8-14.4V and so give you more power to work with), some sort of DC "brick" power supply or even a computer power supply with an appropriate adaptor or modifications.

If running the unit from 12V then you will need to use 12V LEDs. This is a common voltage for LED strips and also for some LED spotlights.

Ripple current ratings on filter capacitors

I need to replace the two filter capacitors in my Luxman L-410 amplifier. The power supply is a centre-tapped, bridge rectified transformer with main supply rails of ±45V DC and the amplifier has a rated output of 75W/channel. Each supply rail has a primary filter capacitor of 15,000µF 56V (Elna For Audio brand).

I need to purchase two good-quality replacement capacitors but I am unclear as to the ripple current rating that I require. I could just buy the capacitor with the highest ripple current rating (around 7.5A) but I would like to know what is actually required.

I have done a very simple calculation based on the determination of the ripple peak-to-peak voltage, conversion of this p-p voltage to an RMS value and then calculating the ripple current using Ohms Law, using the capacitors' impedance at 100Hz. My initial assumption of a 2A current draw on each supply rail and using the above logic results in a ripple current of 2.15A.

However, maths and electronic theory are not my strong points and I was wondering what Silicon Chip designers do to assess the ripple current requirements of your top-end amplifier circuits such as the Ultra Low Distortion Mk3 and the 20W Class A unit. (M. F., via email).

● In practice, there are three parameters to be considered when deciding on the size of the filter capacitors in the power supply of an audio amplifier. The first is ripple current rating and

continued next page

MARKET CENTRE

Cash in your surplus gear. Advertise it here in SILICON CHIP

FOR SALE

PCBs MADE, ONE OR MANY. Any format, hobbyists welcome. Sesame Electronics Phone 0434 781 191. sesame@sesame.com.au www.sesame.com.au

PCB MANUFACTURE: single to multi-layer. Bare board tested. One-offs to any quantity. 48 hour service. Artwork design. Excellent prices. Check out our specials: www.ldelectronics.com.au

PCBs & Micros: Silicon Chip Publications can supply PCBs and programmed micros for all recent (and some not so recent) projects. Order online or phone (02) 9939 3295.

Audio + Video: Professional quality Quest AV brand equipment is made and sold in Australia exclusively by Quest Electronics. Ph 0431 920 667. sales@questronix.com.au

KIT ASSEMBLY & REPAIR

KEITH RIPPON KIT ASSEMBLY & REPAIR:
* Australia & New Zealand;
* Small production runs.

Phone Keith 0409 662 794. keith.rippon@gmail.com

VINTAGE RADIO REPAIRS: electrical mechanical fitter with 36 years experience and extensive knowledge of valve and transistor radios. Professional and reliable repairs. All workmanship guaranteed. $10 inspection fee plus charges for parts and labour as required. Labour fees $35 p/h. Pensioner discounts available on application. Contact Alan on 0425 122 415 or email bigalradioshack@gmail.com

WANTED

WANTED: EARLY HIFIs, AMPLIFIERS, Speakers, Turntables, Valves, Books, Quad, Leak, Pye, Lowther, Ortofon, SME, Western Electric, Altec, Marantz, McIntosh, Tannoy, Goodmans, Wharfedale, radio and wireless. Collector/Hobbyist will pay cash. (07) 5471 1062. johnmurt@highprofile.com.au

NIXIE CLOCK KITS

SILICON CHIP July-Aug 2007
Full kits & spare tubes still available
(For a limited time only)

GLESS AUDIO
Phone 0403 055 374; Email glesstron@msn.com

Television Replacements

Your one-stop shop for all your electronic parts from aerials to zener diodes.
134a Ayr Street, Doncaster 3108
03 9850 4144 sales@tvr.com.au
For Capacitors, Transistors & Integrated Circuits
Call or email for details
For our specials, like us on Facebook.

ADVERTISING IN MARKET CENTRE

Classified Ad Rates: $32.00 for up to 20 words plus 95 cents for each additional word. Display ads in Market Centre (minimum 2cm deep, maximum 10cm deep): $82.50 per column centimetre per insertion. All prices include GST. Closing date: 5 weeks prior to month of sale. To book, email the text to silicon@siliconchip.com.au and include your name, address & credit card details, or phone Glyn (02) 9939 3295 or 0431 792 293.

the rule of thumb is that the ripple current rating should at least be equal to the total current drain from the supply when the amplifier is delivering maximum power.

In your case, the maximum power is 150W. Divide that by 0.6 to allow for the total power of a class-B output stage and you have a figure of 250W. Divide that by the total supply voltage of 90V and the current is 2.77A. So if you purchase capacitors with a ripple rating of 7.5A, you have that point covered.

The second point to consider is power supply ripple (ie, the 100Hz ripple superimposed on the supply rails) and this needs to be looked at when the amplifier is quiescent (ie, delivering no audio signal) and when it is delivering full power. You need the ripple to be quite low when the amplifier is quiescent otherwise there may be audible hum, particularly if you are listening via headphones.

Or maybe the hum won't be particularly audible but it might lead to higher than wanted THD +N (total harmonic distortion + noise). Given the fact that you cannot do anything about the fixed load on the amplifier power supply when it is quiescent, the two factors which determine the ripple voltage are the total filter capacitance and the total ESR (equivalent series resistance at 100Hz). If you purchase good quality capacitors you can assume that the ESR will be low.

Finally, a designer of an audio amplifier would want to look at the supply voltage ripple when the amplifier was delivering maximum power. This will be a much higher figure, typically several volts, superimposed on the nominal supply voltage. This will act to reduce the maximum power available at clipping.

In this discussion, we have not mentioned PSRR (power supply rejection ratio) which is a determining factor as to how much ripple can be tolerated but since the PSRR of your amplifier is already fixed, we can neglect it.

In general, the more filter capacitance the better, but the in-rush current at switch-on can then present a problem for the bridge rectifier and fuse ratings. In practice, if you fit 15,000µF of capacitance to each supply rail, the overall performance should be fine. SC

RFMA RF Modules Australia
Low Power Wireless Connectivity Specialists

USB BLUETOOTH
PARANI UD100-G03
Class 1 Bluetooth 2.0+EDR
Working distance to 300m
BlueSoleil Bluetooth Stack
Optional 5dBi Dipole Antenna

Applications:
Rural
Utilities
Industrial
Commercial
Government
Meter Reading

ORDER ONLINE NOW @ www.rfmodules.com.au

RF Modules Australia. P.O. Box 1957 Launceston, TAS., 7250.
Ph: 03-6331-6789. Email: sales@rfmodules.com.au. Web: rfmodules.com.au

Switchmode Bench Supply

. . . continued from page 37

The 10MΩ and 2.2MΩ resistors provide a small bias current to the two panel meters so that they do not give a negative reading when the output voltage is 0V or no current is being drawn.

The two remaining trimpots, VR4 and VR6, are used to trim out any offset error in the voltage feedback and current limiting circuitry respectively. These inputs have a low impedance to ground so the adjustment ranges span just a few millivolts either side of 0V.

Remaining circuitry

The circuit is protected from a reversed input supply polarity by Mosfet Q1. When the supply is connected the right way, Q1's gate is pulled positive by the 100kΩ resistor and clamped at a safe level by the 15V zener diode. This switches it on and allows ground current to flow from the circuit back to the supply.

If connected backwards, the gate is pulled negative and so Q1 remains off. Its body diode is also reverse-biased and thus very little current will flow. The 100nF capacitor from its gate to ground slows its turn-on to avoid large current spikes charging the input capacitor bank when power is first supplied; IC1 has a soft-start feature, so it's just this input bank that can draw a high current initially.

A 10A fuse protects the circuit against serious faults while 27V zener diode ZD2 conducts if the input supply voltage becomes too high. If that excessive voltage is maintained for very long, it will blow the fuse. The clamping voltage is above the 25V rating of the input capacitor bank but they are unlikely to fail due to a brief over-voltage of just a few volts and we don't want ZD2 to conduct any significant current with the supply below 25V.

A 4.7μF capacitor and 3.3μH inductor L2 prevent much switching noise from passing back through the input leads, which could lead to electromagnetic interference being radiated from them. Power switch S1 enables the switchmode regulator and at the same time, applies power to the rest of the circuit.

When LK1 is moved to the "Test" position, the linear regulator remains off and power can bypass it from S1 straight to the output. This is so that the constructor can check the linear regulator and other circuitry is working before activating the switchmode portion; otherwise troubleshooting could be very difficult.

Finally, there is a Schottky clamp diode (D16) at the output of the switchmode regulator so that its output can not be pulled very far below ground by the linear regulator at start-up. There is also a clamp consisting of two 27V zeners (ZD5 & ZD6) in series after filter inductor L3, so that if the switchmode regulator feedback fails (including the ZD7/ZD8 voltage clamp), its output will not go high enough to damage the 63V filter capacitors or any part of the linear regulator circuitry.

LDO operation & construction

That's all we have room for this month. Next month, we'll describe the linear regulator section and begin the construction. **SC**

DOWNLOAD OUR CATALOG AT
www.iinet.net.au/~worcom
WORLDWIDE ELECTRONIC COMPONENTS
PO Box 631, Hillarys, WA 6923
Ph: (08) 9307 7305 Fax: (08) 9307 7309
Email: worcom@iinet.net.au

Notes & Errata

Soft Starter for Power Tools (July 2012): the 10mΩ SMD shunt was left off the parts list. This should be a 6332 (metric)/2512 (imperial) size SMD chip resistor with a rating of at least 2W, such as CRA2512-FZ-R010ELF (element14 Cat. 2394421).

Advertising Index

Altronics 75-79
Apex Tool Group 5
Bitscope Designs 13
Control Devices Pty Ltd 7
Electrolube 39
Emona Instruments 11
Enertel Pty Ltd 29
Front Panel Express 8
Futurlec 8
Gless Audio 95
Harbuch Electronics 91
Hare & Forbes ..... OBC
High Profile Communications 95
Icom Australia 9
Jaycar IFC,45-52,92
Keith Rippon 95
KitStop 10
LD Electronics 95
Master Instruments 41
Microchip Technology 71
Mikroelektronika ..... IBC
Ocean Controls 12
Quest Electronics 95
RF Modules 96
Rohde & Schwarz 3
Sesame Electronics 95
Silicon Chip Binders 72
Silicon Chip Online Shop 88-89
Silicon Chip Subscriptions 75
Television Replacements 95
Verbatim 55
Vicom Australia 43
Wiltronics 6
Worldwide Elect. Components 96

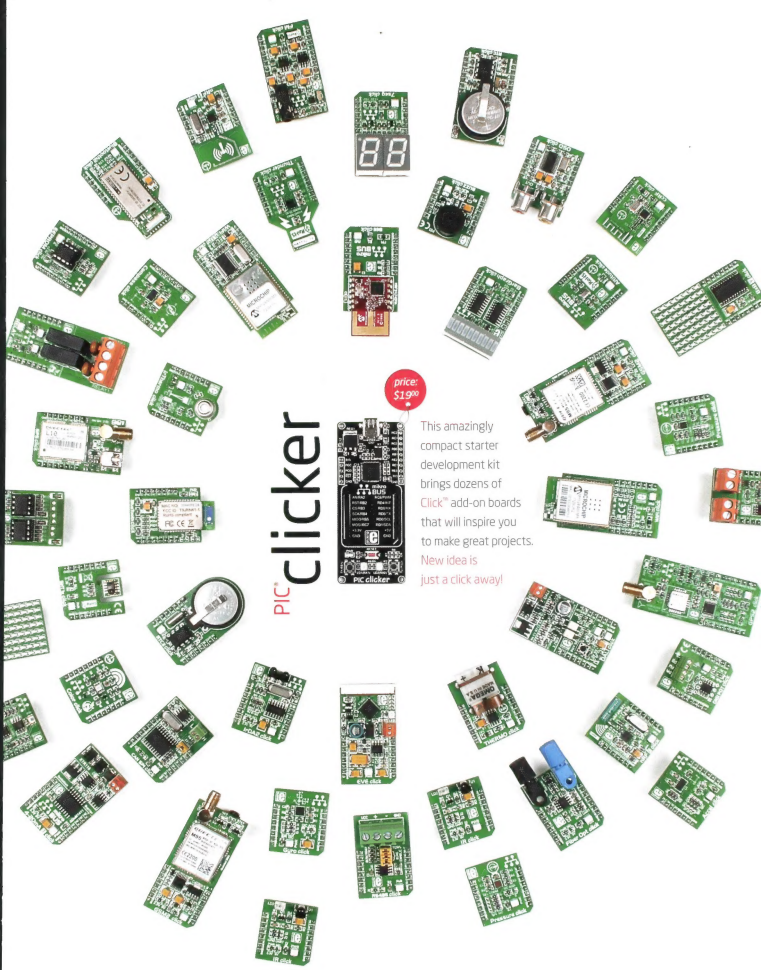

MikroElektronika
DEVELOPMENT TOOLS | COMPILERS | BOOKS

GET IT NOW
www.mikroe.com/pic/clicker/

WORKSHOP ESSENTIALS

Digital Calipers
- 150mm
- Hardened spring & legs

Inside Divider	Inside Caliper	Outside Caliper
~~$9.90~~	~~$9.90~~	~~$9.90~~
$8 (Q634)	$8 (Q635)	$8 (Q636)

Steel Rulers
- Easy to read graduations
- Metric on one side and imperial graduations on the reverse side

150mm/6"	300mm/12"	600mm/24"	1000mm/40"
~~$6.00~~	~~$14.30~~	~~$20.90~~	~~$26.40~~
$6 (Q620)	$13 (Q621)	$19 (Q622)	$24 (Q623)

Digital Angle Rulers
- 360° range
- Stainless steel
- Quick lock system

180mm	280mm	480mm
~~$33.00~~	~~$44.00~~	~~$49.50~~
$29 (M970)	$39 (M972)	$44 (M974)

70-630 Double Ended Scriber
- 190mm hardened steel

~~$9.90~~
$8 (Q630)

70-631 Pocket Pen Scriber
- 150mm carbide tipped

~~$20.90~~
$18 (Q631)

Digital Calipers
- Metric, inch & fraction
- 4-way measuring
- Includes battery

150mm/6"	200mm/8"
~~$31.90~~	~~$49.50~~
$29 (M738)	$44 (M739)

10 piece Screw Extractor Set
- Thread extractor range 3/16" - 5/8" (M5-M16)
- 10 piece set

~~$26.40~~
$22 (T870)

Metric Thread Repair Kit
- Metric
  M5 x 0.8mm
  M6 x 1.0mm
  M8 x 1.25mm
  M10 x 1.5mm
  M10 x 1.75mm
- 130 piece set

~~$163.90~~
$149 (T100)

Engineers File Set Second Cut
- 200mm hardened and tempered files
- Second cut: Flat, 1/2 Round, Round, Square, Triangular
- Inc. carry case

~~$31.90~~
$25 (F100)

NIC Portable Video Inspection Camera - 3 Metre
- 12.5mm camera with 1M cable
- LED Lighting
- Includes 2M ext. cable, magnetic pick up, mirror tool & carry case

~~$165.00~~
$149 (M697)

GSP-795 Pneumatic Round Stool
- 675-795 seat height
- Ø360mm padded leather seat
- 360° seat rotation

~~$99.00~~
$89 (A359)

Precision Jobber Drill Sets
Precision ground flutes
HSS M2 bright finish

25 Piece Metric (D1272)
- Range: 1-13mm
- 0.5mm increments

29 Piece Imperial (D1282)
- Range: 1/16 - 1/2"
- 1/64" increments

~~$80.00~~	~~$90.20~~
$79 (D1272)	$79 (D1282)

EDBD-13 Drill Sharpener
- 3-13mm or 1/8"-1/2"
- Diamond wheel
- Split point
- 80W, 240V motor

~~$99.00~~
$89 (D070)

WCH-6D + WRC-5D Workshop Series Tool Chest & Roller Cabinet Package
- Ball bearing slides
- Protective drawer liners
- Key lockable

WCH-6D
- 6 drawer tool chest
- 600 x 280 x 340mm

WRC-5D
- 5 drawer roller cabinet
- 616 x 330 x 762mm

~~$280.00~~
PACKAGE PRICE ONLY $259 (K004)

ITEMS SOLD SEPARATELY

WBS-3D Steel Work Bench
- 2000 x 640 x 870mm
- 3 Lockable drawers
- Bearing slide drawers
- Huge shelf compartment

~~$396.00~~
$369 (A380)

ATBG280/6 Industrial Bench Grinder
- 150mm wheels
- Fine/coarse grit
- 1/3hp, 240V motor

~~$110.00~~
$99 (G150)

SPD-20B Pedestal Drill
- 16mm drill capacity
- 2MT, 16 spindle speeds
- Swivel & tilt table
- 1hp, 240V motor

~~$352.00~~
$339 (D140)

BECOME A MACHINERYHOUSE MATE

GAIN ACCESS TO:
- ONLINE PROMOS
- EXCLUSIVE OFFERS
- TRACK YOUR ORDERS
- PAPERLESS WARRANTY
- NEWSLETTERS
- LATEST RELEASES
- COMPETITIONS

$20 MATES 20 + $50 MATES 50 + $70 MATES 100 = $70 FREE DISCOUNT VOUCHERS

SIGN UP FOR MATES RATES
MACHINERYHOUSE.COM.AU/SIGNUP

Note: Discount vouchers are valid for online purchases only

PROMO CODE
CHIP314
Use promo code ONLINE OR INSTORE! to receive these special offers
Valid until 23-04-14

Specifications & Prices are subject to change without notification. All prices include GST and valid until 23-04-14

HARE&FORBES MACHINERYHOUSE

NSW	QLD	VIC	WA
(02) 9890 9111	(07) 3274 4222	(03) 9212 4422	(08) 9373 9999
1/2 Windsor Rd, Northmead	625 Boundary Rd, Coopers Plains	1 Fowler Rd, Dandenong	41-43 Abernethy Rd, Belmont

www.machineryhouse.com.au

04-SC-270314